A2Z MILLWORK
COMPLETE MILLWORK DRAFTING SERVICES

ARCHITECTURAL MILLWORK
SHOP DRAWING SUBMITTAL FOR

PROJECT NAME:

SAMPLE DRAWING

GENERAL NOTES:

MANUFACTURER:

TEL: 508.273.0500

ARCHITECT:

INTERIOR DESIGNER:

COMPANY NAME
ADDRESS
ADDRESS
ADDRESS
TEL: FAX:
CONTACT NAME:

CONTRACTOR:

FINISHER :

INSTALLER:

LUMBER FOR TRANSPARENT FINISH:

TAG	SPECIES	CUT	FINISH	QUALITY GRADE
WD-1	OSB	-	SAND/EPOXY/SATIN	-
WD-2	OAK	-	DARK GREY	-
WD-3	TBD	-	-	-
WP-1	CORK BOARD	-	-	-

DECORATIVE LAMINATES

TAG	MANUFACTURER	GRADE	THICKNESS	COLOR	CATALOG #	SPECIAL REQ.
PLAM-1	LAMINART	-	-	BLEACHED BURLAP	501	48" x 120"
PLAM-2	LAMINART	-	-	SMOKED CHARCOAL BURLAP	505	48" x 120"
PLAM-3	NEVAMAR	-	-	BLACK - TEXTURED/SUEDE	S6001-T	-
PLAM-4	WILSONART	-	-	LOFT DOOR - FINE VELVET	Y0679-38	48" x 120"

CORE-PLYWOOD PANELS

TAG	THICKNESS	CATALOG #	FINISH	MOISTURE RESISTANT
$\frac{3}{4}$" PLYWOOD	$\frac{3}{4}$"	PROPINE3/448	UNFINISHED PINE PLYWOOD	NO
$\frac{1}{2}$" PLYWOOD	$\frac{1}{2}$"	PROPINE1/248	UNFINISHED PINE PLYWOOD	NO
$\frac{3}{4}$" WHITE MELAMINE	$\frac{3}{4}$"	BTLA100264	WHITE	NO
$\frac{5}{8}$" WHITE MELAMINE	$\frac{1}{4}$"	BTLA100187	WHITE	NO
$\frac{1}{2}$" WHITE MELAMINE	$\frac{1}{2}$"	BTLA100165	WHITE	NO
$\frac{1}{4}$" WHITE MELAMINE	$\frac{1}{4}$"	BTDA200065	WHITE	NO
$\frac{3}{4}$" PARTICLE BOARD	$\frac{3}{4}$"	ATAPA100034	PARTICLE	NO
$\frac{3}{4}$" MDF	$\frac{1}{4}$"	BM000641	PRIMED BY A2Z* (unless otherwise noted)	NO
$\frac{1}{2}$" MDF	$\frac{1}{2}$"	BM000761	PRIMED BY A2Z* (unless otherwise noted)	NO
$\frac{1}{4}$" MDF	$\frac{1}{4}$"	G10004490970000	PRIMED BY A2Z* (unless otherwise noted)	NO
$\frac{3}{4}$" MR	$\frac{3}{4}$"	G70012490970000	PRIMED BY A2Z* (unless otherwise noted)	YES
$\frac{1}{2}$" MR	$\frac{1}{2}$"	G70008490970000	PRIMED BY A2Z* (unless otherwise noted)	YES
$\frac{1}{4}$" MR	$\frac{1}{4}$"	987537	PRIMED BY A2Z* (unless otherwise noted)	YES

*See finishing schedule for details

STANDING & RUNNING TRIM

TAG	MANUFACTURER	CATALOG #	MATERIAL	SIZE	FINISH	SPECIAL REQ.
WB-1	-	-	MDF	$\frac{3}{4}$"x3-$\frac{1}{2}$"	PRIMED	-
WB-2	-	-	MDF	$\frac{3}{4}$"x6"	PRIMED	-
WB-3	-	-	MDF	$\frac{3}{4}$"x12"	PRIMED	-
TR-1	-	-	SOLID NOSING	$\frac{3}{4}$"X3"	PAINTED BLACK	-

SOLID SURFACES

TAG	MANUFACTURER	GRADE	THICKNESS	COLOR	CATALOG #	SPECIAL REQ.
SSM-3	ERIK RUEDA DESIGN LAB	-	$\frac{1}{2}$"	RESIN/ EPOXY	-	-

HARDWARE SCHEDULE

TAG	ITEM	MANUFACTURER	MODEL#	REMARK/FINISH
HW-1	DRAWER PULL	DOUG MOCKETT	DP252A	BLACK
HW-2	DRAWER PULL	DOUG MOCKETT	DP269A	BLACK
HW-2A	DRAWER PULL	DOUG MOCKETT	DP269B	BLACK
HW-3	DRAWER PULL	DOUG MOCKETT	DP254A	BLACK
HW-3A	DRAWER PULL	DOUG MOCKETT	DP254B	BLACK
HW-4	DRAWER PULL	DOUG MOCKETT	DP3C	BLACK
HW-4A	DRAWER PULL	DOUG MOCKETT	DP3F	BLACK
HW-5	HD SHELF BRACKET	AKSEL	BHSHD5806CSB1	MATTE BLACK
HW-6	TRASH PULLOUT	REVASHELF	RV15PB2S	DOUBLE TRASH PULLOUT
HW-7	SHELF STANDARD	RICHELIEU	6285482G	ZINC
HW-8	SHELF BRACKET	RICHELIEU	62185102G	ZINC
HW-9	TABLE LEGS	SYMMETRY HARDWARE	LITTLE CRAFTSMAN	17" T x 20" W - BLACKENED
HW-10	BLIND DOOR HARDWARE	RICHELIEU	-	-
HW-11	Z CLIP	STAR HANGER	400 NZ	$\frac{1}{4}$" NYLON PANEL CLIP
HW-12	DOOR LOCK	RICHELIEU	LOC807342014A	KEYED ALIKE BRIGHT NICKEL
HW-13	CEILING CLIP	STAR HANGER	510 CEILING CLIP	$\frac{3}{4}$" METAL PANEL CEILING CLIP

MASTER MATERIAL SCHEDULE

TAG	NOTES:
WD-1	$\frac{3}{4}$" SANDED/SATIN FINISHED OSB APPLIED PANEL
WD-2	$\frac{3}{4}$" STAINED OAK VENEER PANEL - DARK GREY
WD-3	$\frac{3}{4}$" STAINED WOOD VENEER PANEL - TBD
WP-1	$\frac{1}{4}$" CORK BOARD
PL-2	LAMINART - SMOKED CHARCOAL BURLAP
PL-4	WILSONART - LOFT DOOR - FINE VELVET - 48" X 120"
SSM-3	SOLID SURFACE - ERIK RUEDA DESIGN LAB - RESIN/ EPOXY
TR-1	$\frac{3}{4}$"X3" SOLID NOSING - PAINTED BLACK
HW-1	DRAWER PULL - DOUG MOCKETT - DP252A - BLACK
HW-2	DRAWER PULL - DOUG MOCKETT - DP269A - BLACK
HW-2A	DRAWER PULL - DOUG MOCKETT - DP269B - BLACK
HW-3	DRAWER PULL - DOUG MOCKETT - DP254A - BLACK
HW-3A	DRAWER PULL - DOUG MOCKETT - DP254B - BLACK
HW-4	DRAWER PULL - DOUG MOCKETT - DP3C - BLACK
HW-4A	DRAWER PULL - DOUG MOCKETT - DP3F - BLACK
HW-5	HD FLOATING SHELF BRACKET - AKSEL - 58"L
HW-6	TRASH PULLOUT - REVASHELF - RV15PB2S
HW-7	SHELF STANDARD - RICHELIEU - 6285482G - ZINC
HW-8	SHELF BRACKET - RICHELIEU - 62185102G - ZINC
HW-9	TABLE LEGS - SYMMETRY HARDWARE - 17" T x 20" W
HW-10	BLIND DOOR HARDWARE - RICHELIEU - TBD
HW-11	Z CLIP - STAR HANGER - 400 NZ - $\frac{1}{4}$" NYLON PANEL CLIP
HW-12	DOOR LOCK - RICHELIEU LOC807342014A
HW-13	CEILING CLIP - STAR HANGER - 510 CEILING CLIP

GENERAL SHOP FABRICATION NOTES:

*1. All shop joints to be glued with type II water resistant wood glue. Titebond II Premium Wood Glue.

*2. All shop laminated panels and veneers to be glued with Wurth Premium Contact adhesive(#WWPREMIUM).

*3 All custom millwork to to be build with methods described in A2Z shop drawings.

GENERAL INSTALLATION NOTES:

*1. All field joints in standing and running trim to be glued with type II water resistant wood glue. Titebond II Premium Wood Glue

*2 All outside corners in standing and running trim to be mitered and nailed with min. 1 $\frac{1}{4}$" 18 gauge brad nails. (all nail holes filled by others)

*3 All inside corners in standing and running trim to be coped if profiled and butted if square stock.

*4 If walls are framed with metal studs. All Baseboard, Chair Rail, Lean Rail, and Windows sills will be glued to wall with Liquid Nails LN-92 Latex. If the walls are wood framed only the window sills will be glued

*5 All standing and running trim will be nailed to walls at min. of 2 nails every 16" with 1 $\frac{3}{4}$" 16 gauge finish nails (all nail holes filled by others)

*6 All Upper Cabinets to be screw to wall with a min of 4 screws into blocking All Base Cabinets to be screw to wall with a min of 2 screws into blocking Typical cabinet screws to be Fastcap 2 $\frac{1}{2}$" #10 with $\frac{9}{16}$ head(all blocking by others)

*7 All custom millwork to be installed with methods specified in shop drawings

A2Z MILLWORK
COMPLETE MILLWORK DRAFTING SERVICES

MANUFACTURER: A2Z MILLWORK LLC

PROJECT:

REVISIONS

JOB #: 190412

DATE: 10/5/2020

DRAWN BY: A2Z

SHEET: FINISH SCHEDULE

SHEET: SPEC1

COPYRIGHT © A2Z MILLWORK LLC 2019

WD-2 CABINET CONSTRUCTION SHEDULE		
PART	TYPE	DESCRIPTION
CABINET DOOR	PARTICLE CORE	WD-2
CABINET BOX	PARTICLE CORE	3/4" BLACK MELAMINE
CABINET BACK	PARTICLE CORE	1/2" BLACK MELAMINE
DRAWER BOX	PARTICLE CORE	5/8" BLACK MELAMINE
DRAWER BOTTOM	PARTICLE CORE	1/2" BLACK MELAMINE
CABINET HINGE	BLUM 110° 71B3590	FULL OVERLAY
DRAWER SLIDE	BLUM TANDEM 563H	UNDERMOUNT
EXPOSED EDGEBANDING	.5MM	WD-2
SEMI EXPOSED EDGEBANDING	.5MM	BLACK PVC
ALL CABINET JOINTS GLUED AND DOWLED		

PL-2 CABINET CONSTRUCTION SHEDULE		
PART	TYPE	DESCRIPTION
CABINET DOOR	PARTICLE CORE	PLAM-2
CABINET BOX	PARTICLE CORE	3/4" BLACK MELAMINE
CABINET BACK	PARTICLE CORE	1/2" BLACK MELAMINE
DRAWER BOX	PARTICLE CORE	5/8" BLACK MELAMINE
DRAWER BOTTOM	PARTICLE CORE	1/2" BLACK MELAMINE
CABINET HINGE	BLUM 110° 71B3590	FULL OVERLAY
DRAWER SLIDE	BLUM TANDEM 563H	UNDERMOUNT
EXPOSED EDGEBANDING	.5MM	PLAM-2
SEMI EXPOSED EDGEBANDING	.5MM	BLACK PVC
ALL CABINET JOINTS GLUED AND DOWLED		

PL-4 CABINET CONSTRUCTION SHEDULE		
PART	TYPE	DESCRIPTION
CABINET DOOR	PARTICLE CORE	PLAM-4
CABINET BOX	PARTICLE CORE	3/4" BLACK MELAMINE
CABINET BACK	PARTICLE CORE	1/2" BLACK MELAMINE
DRAWER BOX	PARTICLE CORE	5/8" BLACK MELAMINE
DRAWER BOTTOM	PARTICLE CORE	1/2" BLACK MELAMINE
CABINET HINGE	BLUM 110° 71B3590	FULL OVERLAY
DRAWER SLIDE	BLUM TANDEM 563H	UNDERMOUNT
EXPOSED EDGEBANDING	.5MM	PLAM-4
SEMI EXPOSED EDGEBANDING	.5MM	BLACK PVC
ALL CABINET JOINTS GLUED AND DOWLED		

A2Z MILLWORK
COMPLETE MILLWORK DRAFTING SERVICES

A2Z MILLWORK
COMPLETE MILLWORK DRAFTING SERVICES

MANUFACTURER:
A2Z MILLWORK LLC

PROJECT:

REVISIONS

JOB #: 190412
DATE: 10/5/2020
DRAWN BY: A2Z

SHEET:
CABINET SCHEDULE

SHEET:
SPEC2

COPYRIGHT © A2Z MILLWORK LLC 2019

TABLE OF CONTENTS

PAGE #	ROOM #	DESCRIPTION	SUBMITTAL #1 -9.23.2020					
COVER	-	COVER SHEET	●					
SPEC	-	PROJECT SPECIFICATIONS	●					
INDEX	-	SHEET DETAILS	●					
1.0	236N	NORTH LOUNGE	●					
2.0	217S	OFFICE /WORK ROOM	●					
3.0	221S	LEASING	●					
4.0	227S	MAIN LOBBY	●					
5.0	230S	MAIL ROOM/LOUNGE	●					
6.0	-	ELEV. LOBBY AT LOUNGE (GROUND FLOOR LOBBY)	●					
7.0	23IS	MAKER SPACE	●					
8.0	232S	WORK PODS	●					
9.0	235S	WORK PODS	●					
10.0	236S	KITCHEN (MAKER SPACE KITCHEN)	●					
11.0	237S	CORRIDOR	●					
12.0	240S	COMMUNITY ROOM	●					
13.0	241S	COFFEE BAR	●					
14.0	242S	FITNESS	●					
15.0	246S	ELEVATOR LOBBY	●					
16.0	328S	GAME ROOM	●					
17.0	330S	LEVEL 2 OPEN LOBBYCORRIDOR	●					

A2Z MILLWORK
COMPLETE MILLWORK DRAFTING SERVICES

MANUFACTURER:
A2Z MILLWORK LLC

PROJECT:

REVISIONS

JOB #: 190412

DATE: 10/5/2020

DRAWN BY: A2Z

SHEET:
SHEET DETAILS

SHEET:
INDEX

COPYRIGHT © A2Z MILLWORK LLC 2019

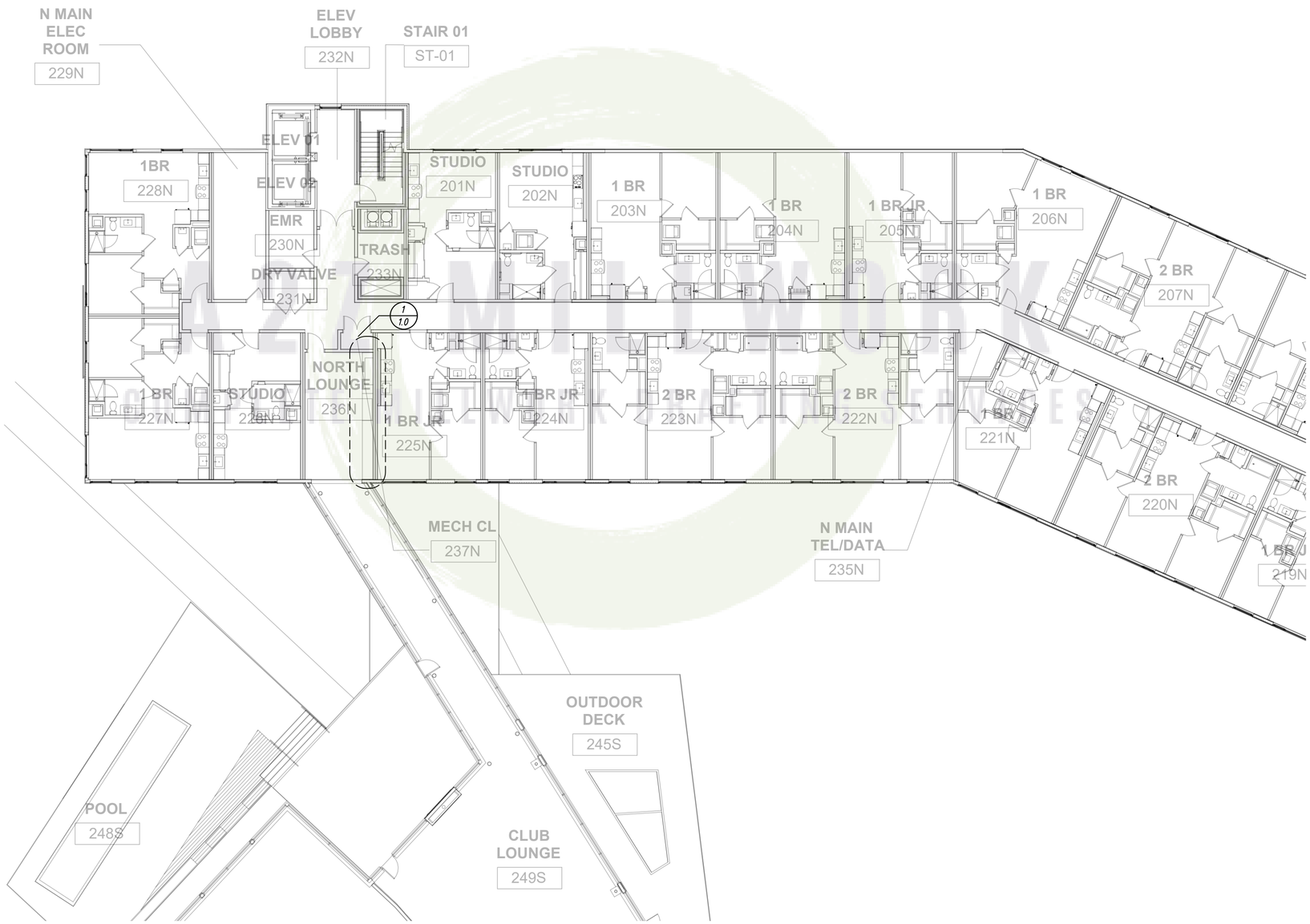

1 GROUND FLOOR PLAN
0.1 SCALE: 1/16"=1'-0"

A2Z MILLWORK
COMPLETE MILLWORK DRAFTING SERVICES

MANUFACTURER:
A2Z MILLWORK LLC

PROJECT:

REVISIONS

JOB #: 190412
DATE: 10/5/2020
DRAWN BY: A2Z

SHEET:
GROUND FLOOR PLAN

SHEET:
0.1

COPYRIGHT © A2Z MILLWORK LLC 2019

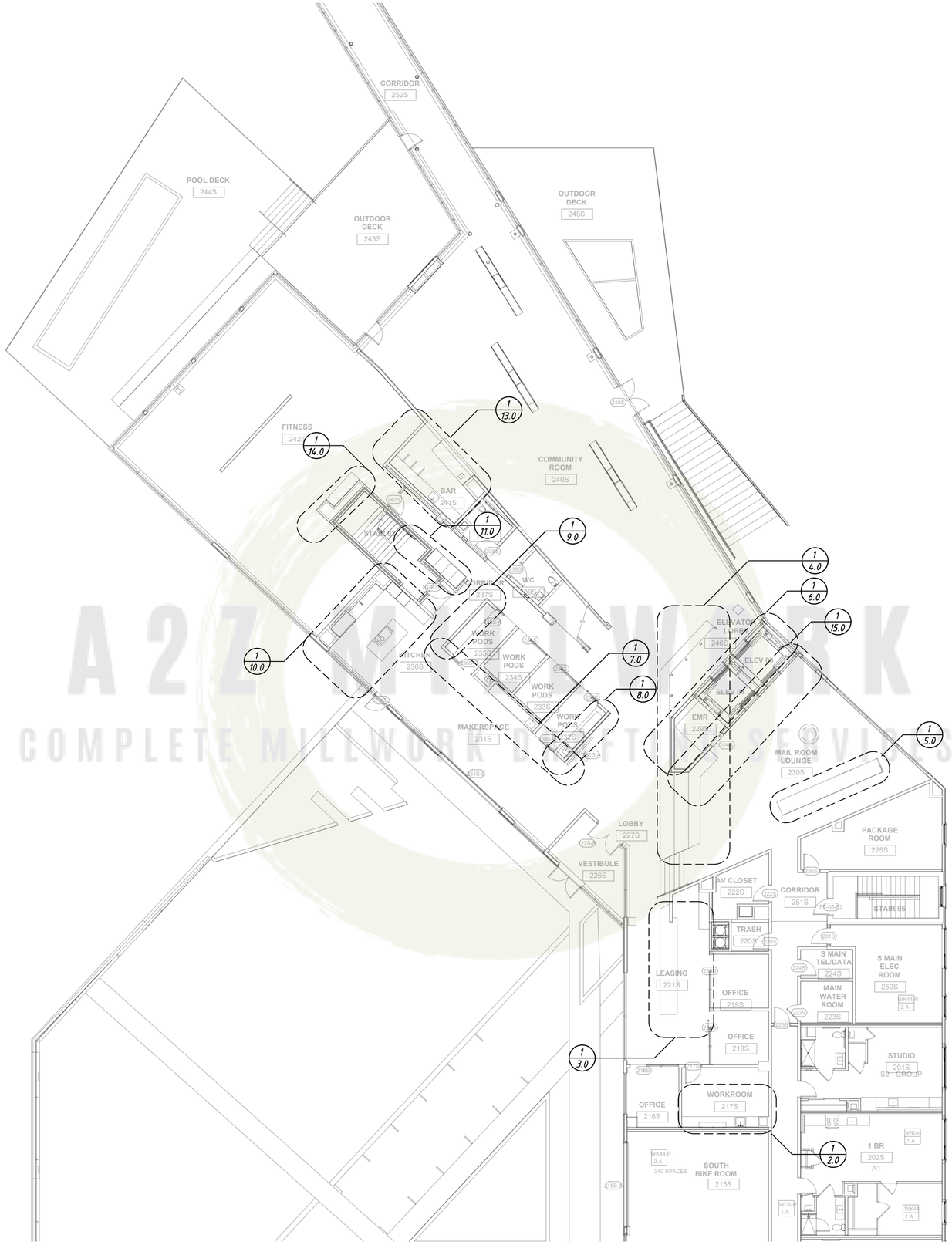

1 / 0.2 ENLARGED GROUND FLOOR SOUTH A
SCALE: 1/16" = 1'-0"

A2Z MILLWORK
COMPLETE MILLWORK DRAFTING SERVICES

MANUFACTURER:
A2Z MILLWORK LLC

PROJECT:

REVISIONS

JOB #: 190412

DATE: 10/5/2020

DRAWN BY: A2Z

SHEET:
ENLARGED GROUND FLOOR SOUTH A

SHEET:
0.2

COPYRIGHT © A2Z MILLWORK LLC 2019

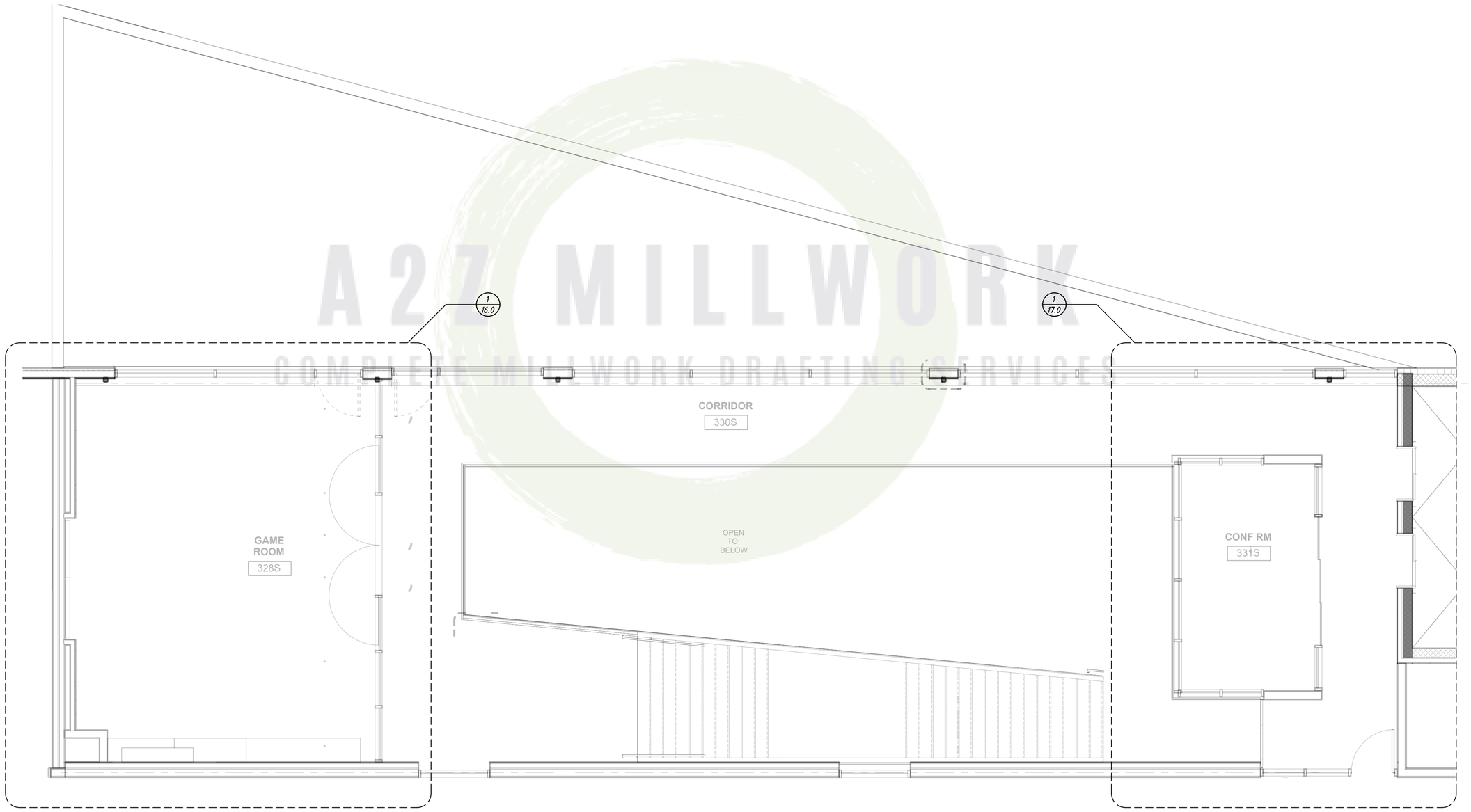

1 ENLARGED LEVEL 02-AMENITY
0.3 SCALE: 3/16"=1'-0"

A2Z MILLWORK
COMPLETE MILLWORK DRAFTING SERVICES

MANUFACTURER:
A2Z MILLWORK LLC

PROJECT:

REVISIONS

JOB #: 190412

DATE: 10/5/2020

DRAWN BY: A2Z

SHEET:
ENLARGED
LEVEL02-AMENITY

SHEET:
0.3

COPYRIGHT © A2Z MILLWORK LLC 2019

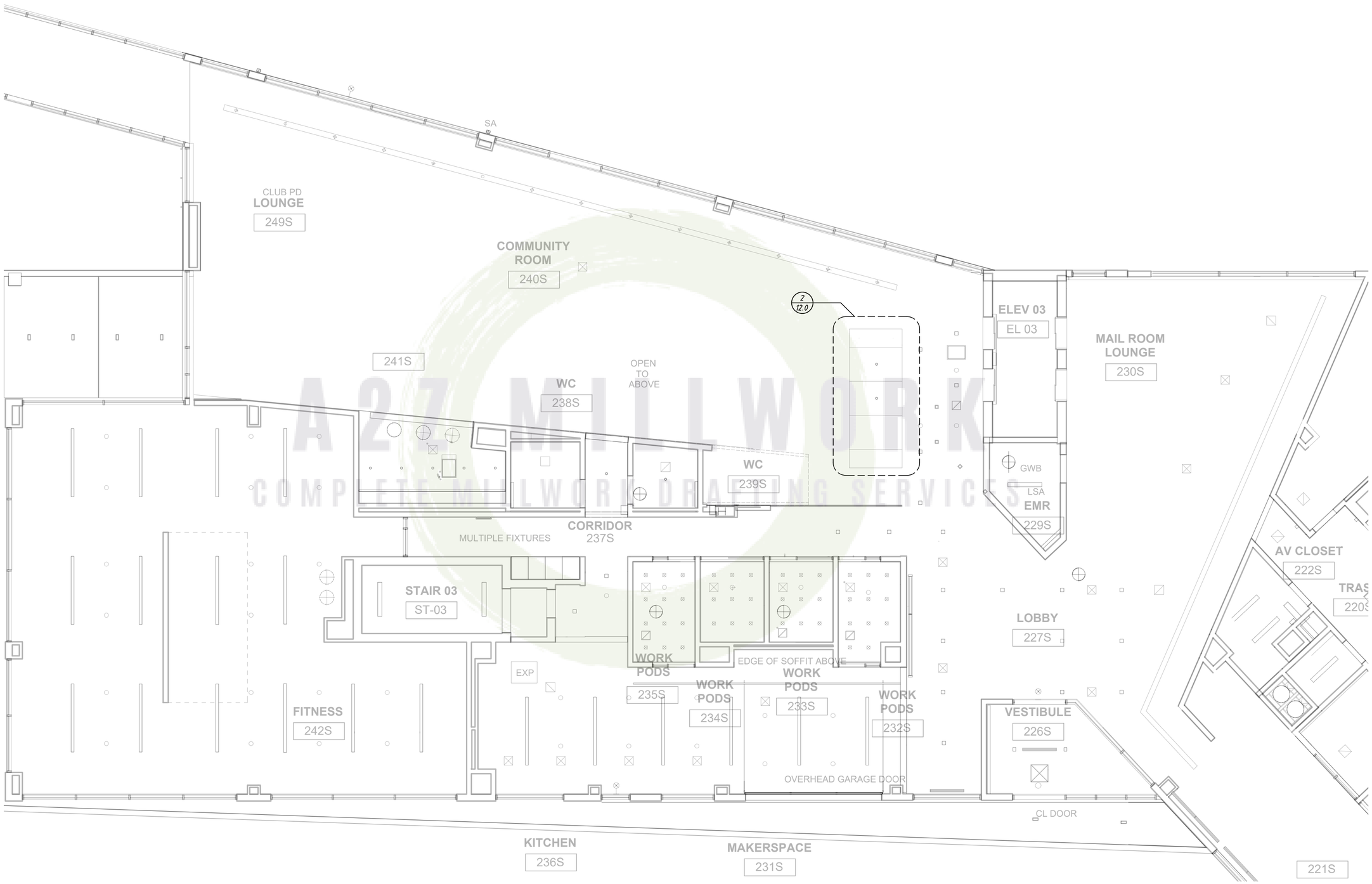

1 / 0.4 GROUND FLOOR - REFLECTED CEILING PLAN
SCALE: 1/8"=1'-0"

A2Z MILLWORK
COMPLETE MILLWORK DRAFTING SERVICES

MANUFACTURER:
A2Z MILLWORK LLC

PROJECT:

REVISIONS

JOB #:	190412
DATE:	10/5/2020
DRAWN BY:	A2Z

SHEET:
GROUND FLOOR - REFLECTED CEILING PLAN

SHEET:
0.4

COPYRIGHT © A2Z MILLWORK LLC 2019

MASTER MATERIAL SCHEDULE	
TAG	NOTES:
WD-2	4/4" STAINED OAK VENEER PANEL - DARK GREY
TR-1	4/4"X3" SOLID NOSING - PAINTED BLACK
HW-2	DRAWER PULL - DOUG MOCKETT - DP269A - BLACK
HW-5	HD FLOATING SHELF BRACKET - AKSEL - 58"L

WD-2 CABINET CONSTRUCTION SHEDULE		
PART	TYPE	DESCRIPTION
CABINET DOOR	PARTICLE CORE	WD-2
CABINET BOX	PARTICLE CORE	3/4" BLACK MELAMINE
CABINET BACK	PARTICLE CORE	1/2" BLACK MELAMINE
DRAWER BOX	PARTICLE CORE	5/8" BLACK MELAMINE
DRAWER BOTTOM	PARTICLE CORE	1/2" BLACK MELAMINE
CABINET HINGE	BLUM 110° 71B3590	FULL OVERLAY
DRAWER SLIDE	BLUM TANDEM 563H	UNDERMOUNT
EXPOSED EDGEBANDING	.5MM	WD-2
SEMI EXPOSED EDGEBANDING	.5MM	BLACK PVC
ALL CABINET JOINTS GLUED AND DOWLED		

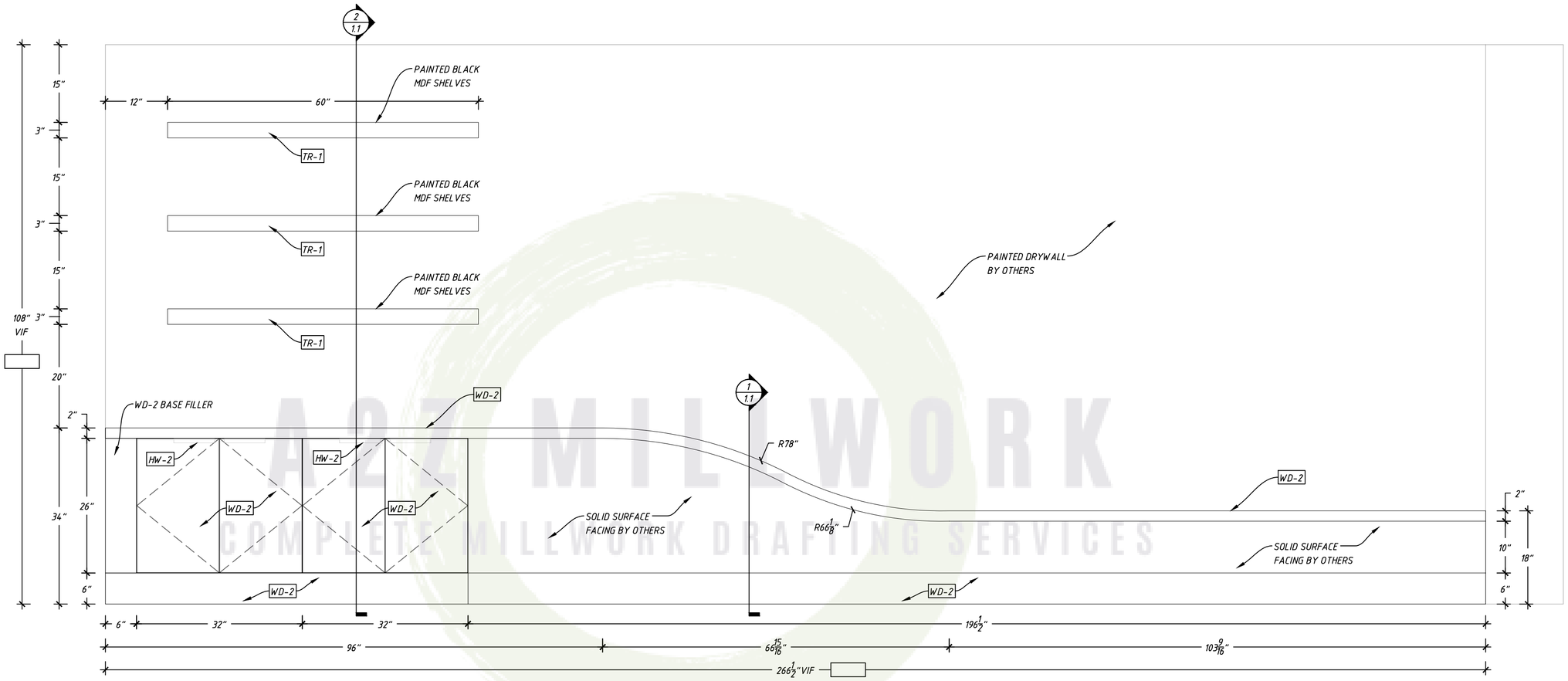

2 / 1.0 NORTH LOUNGE 236N - ELEVATION
SCALE: 3/4" = 1'-0"

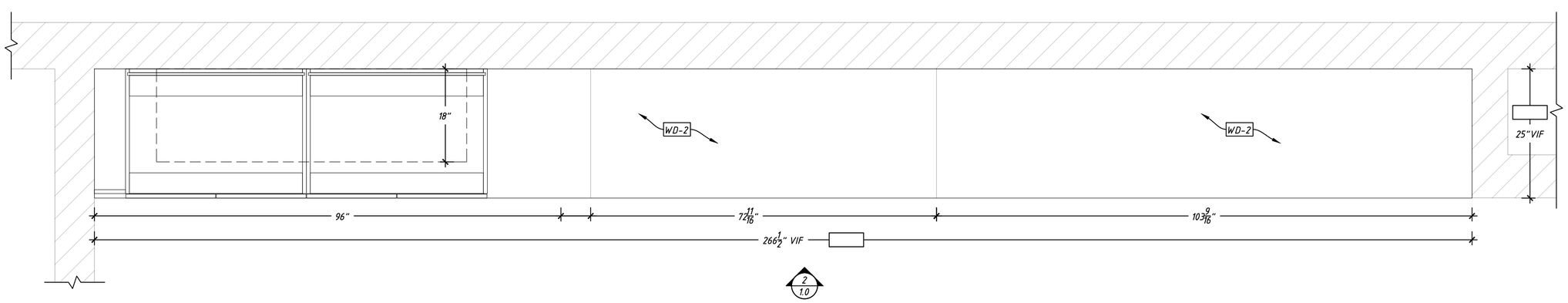

1 / 1.0 NORTH LOUNGE 236N - PLAN
SCALE: 3/4" = 1'-0"

A2Z MILLWORK
COMPLETE MILLWORK DRAFTING SERVICES

MANUFACTURER: A2Z MILLWORK LLC

PROJECT:

REVISIONS

JOB #: 190412
DATE: 10/5/2020
DRAWN BY: A2Z

SHEET: NORTH LOUNGE 236N

SHEET: 1.0

COPYRIGHT © A2Z MILLWORK LLC 2019

MASTER MATERIAL SCHEDULE	
TAG	NOTES:
WD-2	4/4" STAINED OAK VENEER PANEL - DARK GREY
TR-1	4/4"X3" SOLID NOSING - PAINTED BLACK
HW-2	DRAWER PULL - DOUG MOCKETT - DP269A - BLACK
HW-5	HD FLOATING SHELF BRACKET - AKSEL - 58"L

WD-2 CABINET CONSTRUCTION SHEDULE		
PART	TYPE	DESCRIPTION
CABINET DOOR	PARTICLE CORE	WD-2
CABINET BOX	PARTICLE CORE	3/4" BLACK MELAMINE
CABINET BACK	PARTICLE CORE	1/2" BLACK MELAMINE
DRAWER BOX	PARTICLE CORE	5/8" BLACK MELAMINE
DRAWER BOTTOM	PARTICLE CORE	1/2" BLACK MELAMINE
CABINET HINGE	BLUM 110° 71B3590	FULL OVERLAY
DRAWER SLIDE	BLUM TANDEM 563H	UNDERMOUNT
EXPOSED EDGEBANDING	.5MM	WD-2
SEMI EXPOSED EDGEBANDING	.5MM	BLACK PVC
ALL CABINET JOINTS GLUED AND DOWLED		

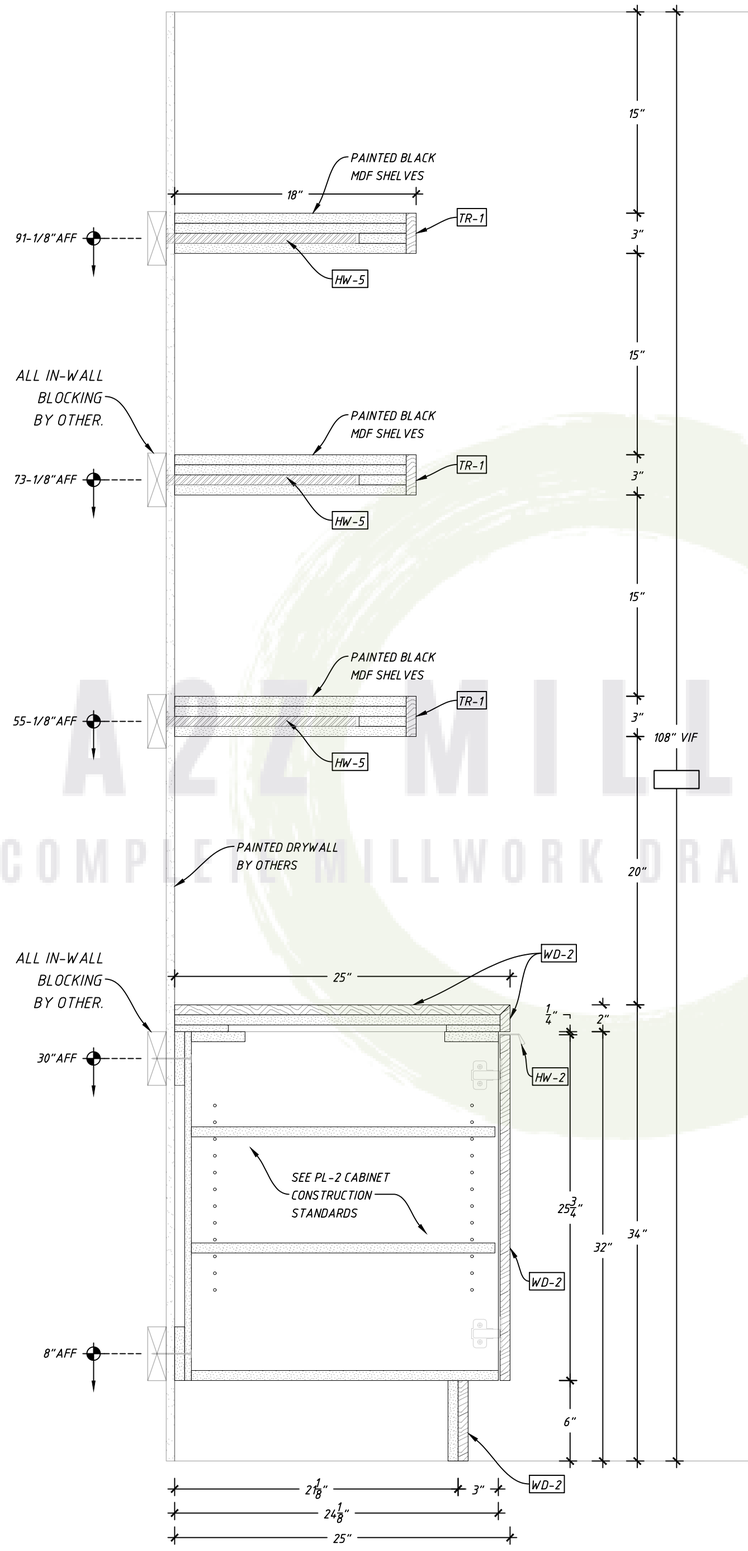

2 SECTION
1.1 SCALE: 1-1/2"=1'-0"

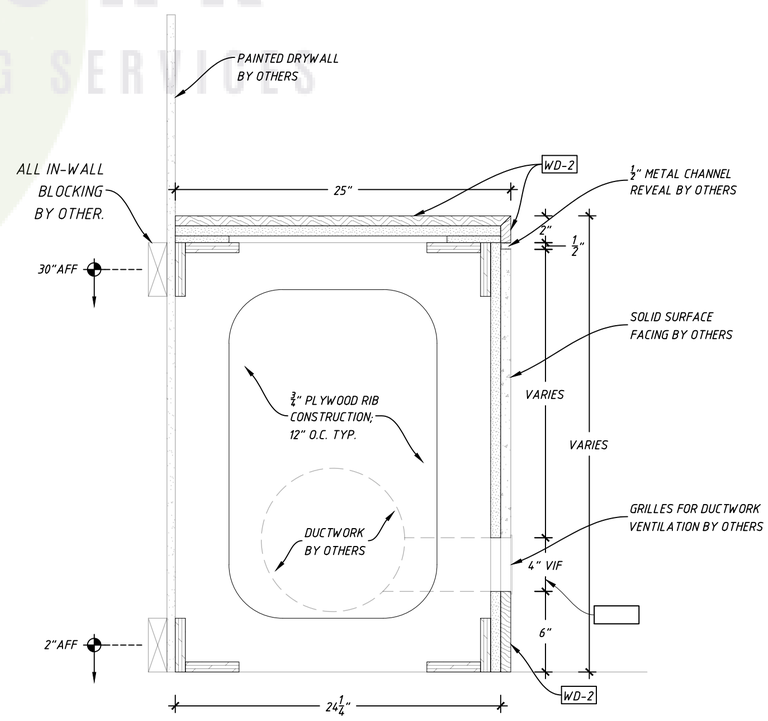

1 SECTION
1.1 SCALE: 1-1/2"=1'-0"

A2Z MILLWORK
COMPLETE MILLWORK DRAFTING SERVICES

MANUFACTURER: A2Z MILLWORK LLC

PROJECT:

REVISIONS

JOB #: 190412
DATE: 10/5/2020
DRAWN BY: A2Z

SHEET: NORTH LOUNGE 236N

SHEET: 1.1

COPYRIGHT © A2Z MILLWORK LLC 2019

MASTER MATERIAL SCHEDULE	
TAG	NOTES:
PL-2	LAMINART - SMOKED CHARCOAL BURLAP
HW-2	DRAWER PULL - DOUG MOCKETT - DP269A - BLACK
HW-6	TRASH PULLOUT - REVASHELF - RV15PB2S
HW-7	SHELF STANDARD - RICHELIEU - 6285482G - ZINC
HW-8	SHELF BRACKET - RICHELIEU - 62185102G - ZINC

PL-2 CABINET CONSTRUCTION SHEDULE		
PART	TYPE	DESCRIPTION
CABINET DOOR	PARTICLE CORE	PLAM-2
CABINET BOX	PARTICLE CORE	3/4" BLACK MELAMINE
CABINET BACK	PARTICLE CORE	1/2" BLACK MELAMINE
DRAWER BOX	PARTICLE CORE	5/8" BLACK MELAMINE
DRAWER BOTTOM	PARTICLE CORE	1/2" BLACK MELAMINE
CABINET HINGE	BLUM 110° 71B3590	FULL OVERLAY
DRAWER SLIDE	BLUM TANDEM 563H	UNDERMOUNT
EXPOSED EDGEBANDING	.5MM	PLAM-2
SEMI EXPOSED EDGEBANDING	.5MM	BLACK PVC
ALL CABINET JOINTS GLUED AND DOWLED		

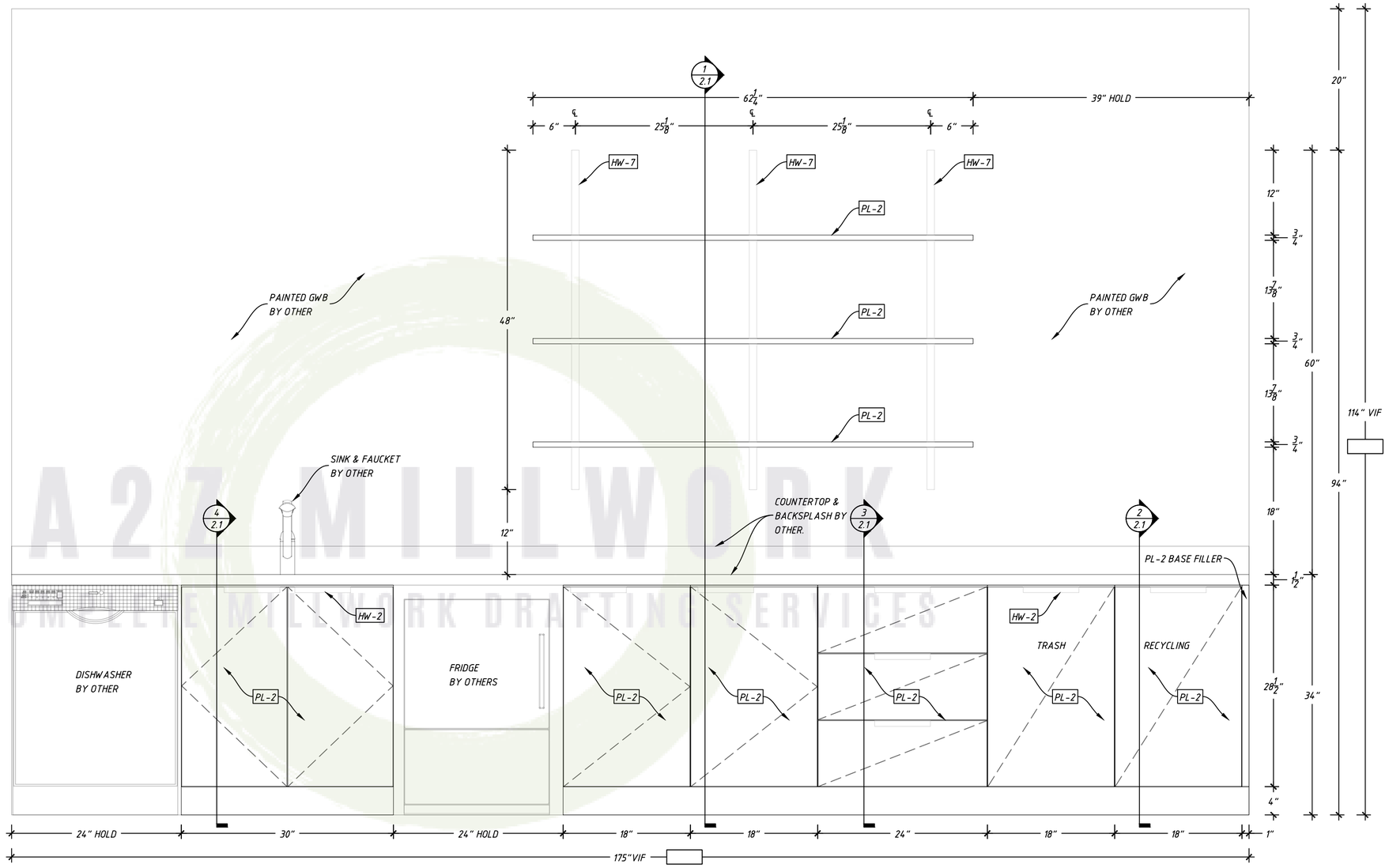

2 / 2.0 OFFICE/WORK ROOM 217S - ELEVATION
SCALE: 1" = 1'-0"

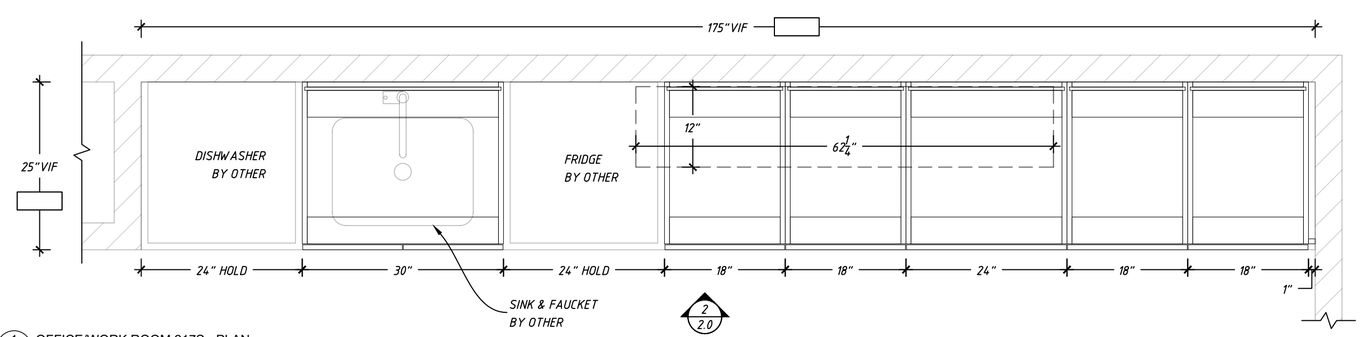

1 / 2.0 OFFICE/WORK ROOM 217S - PLAN
SCALE: 3/4" = 1'-0"

A2Z MILLWORK
COMPLETE MILLWORK DRAFTING SERVICES

MANUFACTURER: A2Z MILLWORK LLC

PROJECT:

REVISIONS

JOB #: 190412
DATE: 10/5/2020
DRAWN BY: A2Z

SHEET: OFFICE/WORK ROOM 217S

SHEET: 2.0

COPYRIGHT © A2Z MILLWORK LLC 2019

MASTER MATERIAL SCHEDULE	
TAG	NOTES:
PL-2	LAMINART - SMOKED CHARCOAL BURLAP
HW-2	DRAWER PULL - DOUG MOCKETT - DP269A - BLACK
HW-6	TRASH PULLOUT - REVASHELF - RV15PB2S
HW-7	SHELF STANDARD - RICHELIEU - 6285482G - ZINC
HW-8	SHELF BRACKET - RICHELIEU - 62185102G - ZINC

PL-2 CABINET CONSTRUCTION SHEDULE		
PART	TYPE	DESCRIPTION
CABINET DOOR	PARTICLE CORE	PLAM-2
CABINET BOX	PARTICLE CORE	3/4" BLACK MELAMINE
CABINET BACK	PARTICLE CORE	1/2" BLACK MELAMINE
DRAWER BOX	PARTICLE CORE	5/8" BLACK MELAMINE
DRAWER BOTTOM	PARTICLE CORE	1/2" BLACK MELAMINE
CABINET HINGE	BLUM 110° 71B3590	FULL OVERLAY
DRAWER SLIDE	BLUM TANDEM 563H	UNDERMOUNT
EXPOSED EDGEBANDING	.5MM	PLAM-2
SEMI EXPOSED EDGEBANDING	.5MM	BLACK PVC
ALL CABINET JOINTS GLUED AND DOWLED		

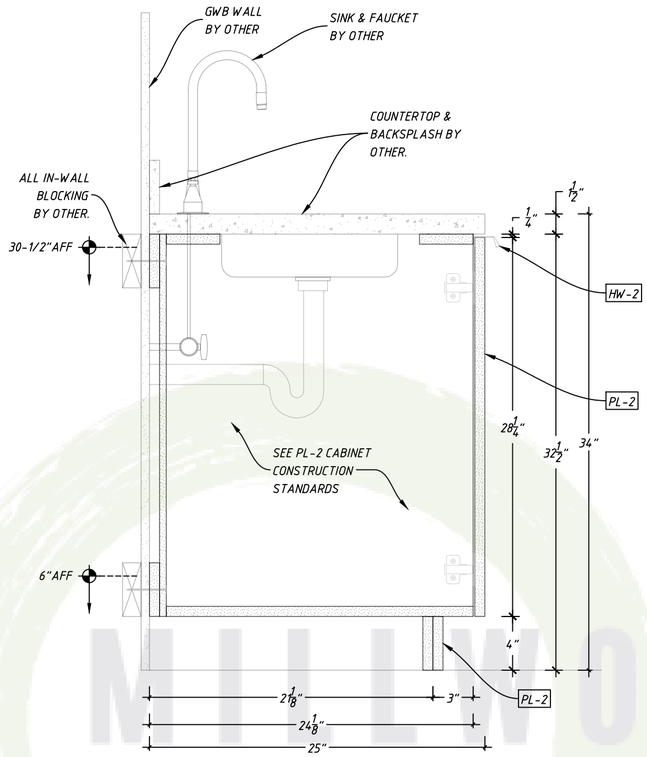

4 OFFICE/WORK ROOM 217S - SECTION
2.1 SCALE: 1-1/2"=1'-0"

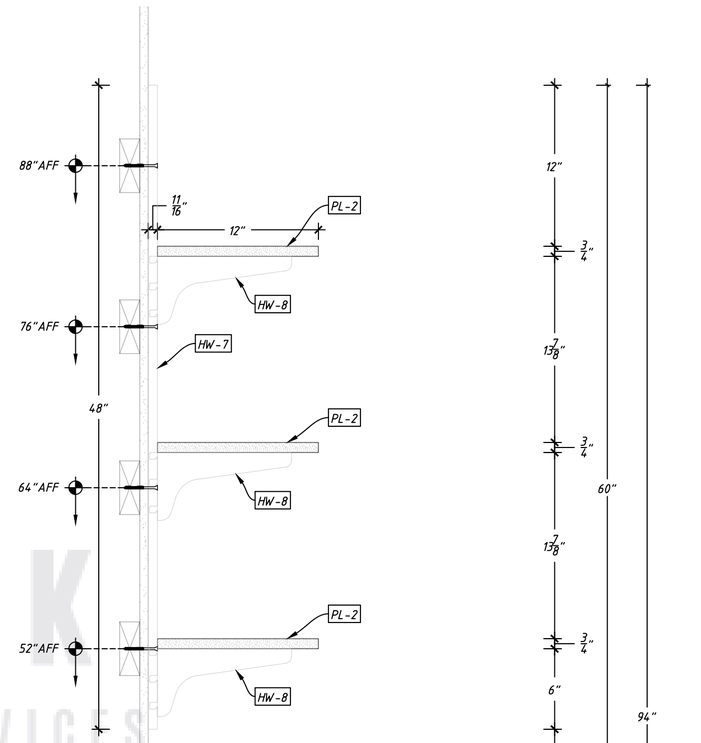

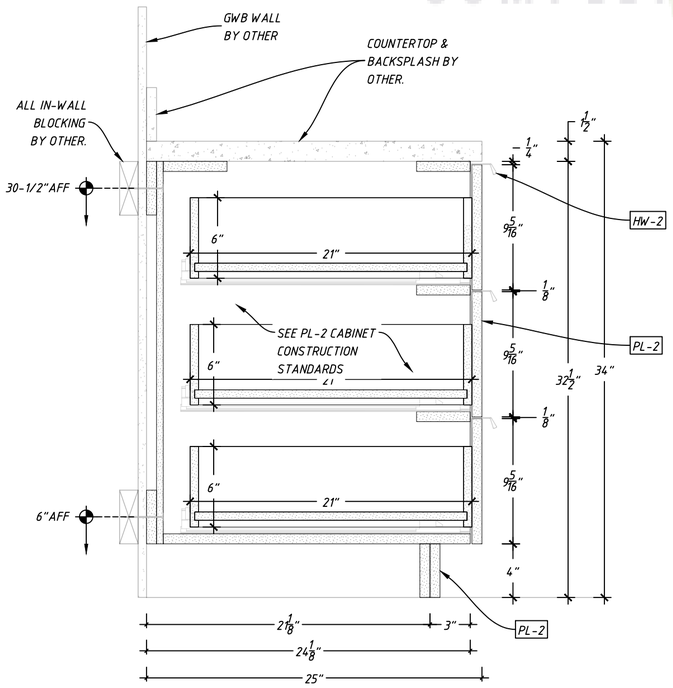

3 OFFICE/WORK ROOM 217S - SECTION
2.1 SCALE: 1-1/2"=1'-0"

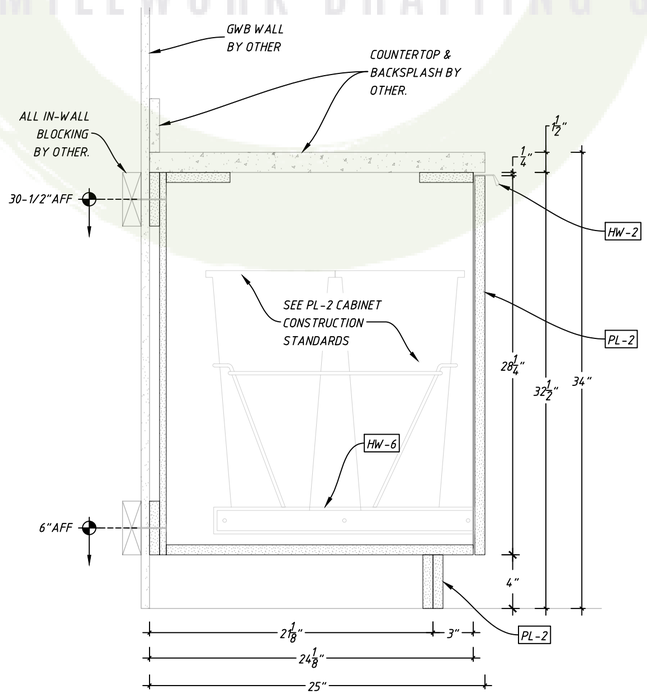

2 OFFICE/WORK ROOM 217S - SECTION
2.1 SCALE: 1-1/2"=1'-0"

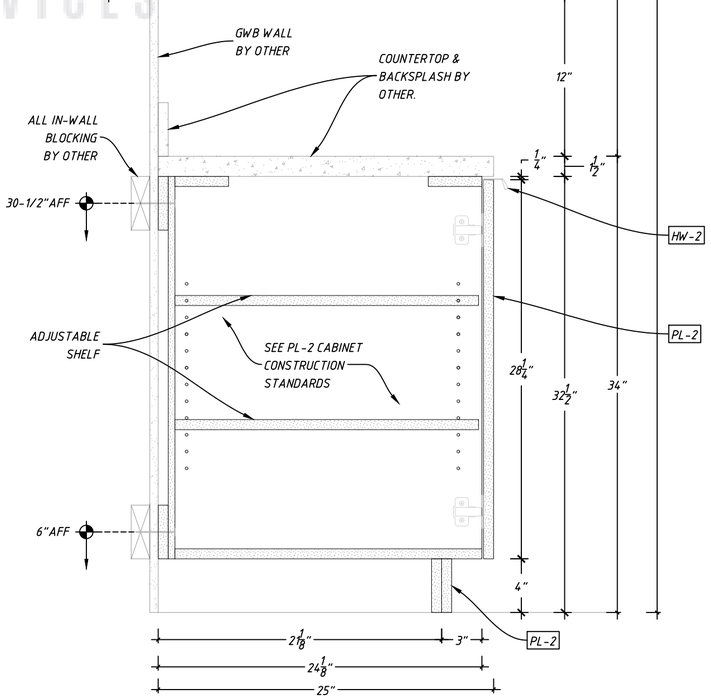

1 OFFICE/WORK ROOM 217S - SECTION
2.1 SCALE: 1-1/2"=1'-0"

A2Z MILLWORK
COMPLETE MILLWORK DRAFTING SERVICES

MANUFACTURER: A2Z MILLWORK LLC

PROJECT:

REVISIONS

JOB #: 190412
DATE: 10/5/2020
DRAWN BY: A2Z

SHEET: OFFICE/WORK ROOM 217S

SHEET: 2.1

COPYRIGHT © A2Z MILLWORK LLC 2019

MASTER MATERIAL SCHEDULE	
TAG	NOTES:
SSM-3	SOLID SURFACE - ERIK RUEDA DESIGN LAB - RESIN/ EPOXY
WD-2	$\frac{3}{4}$" STAINED OAK VENEER PANEL - DARK GREY
PL-2	LAMINART - SMOKED CHARCOAL BURLAP
HW-2	DRAWER PULL - DOUG MOCKETT - DP269A - BLACK
HW-6	TRASH PULLOUT - REVASHELF - RV15PB2S
HW-9	TABLE LEGS - SYMMETRY HARDWARE - 17" T x 20" W
HW-11	Z CLIP - STAR HANGER - 400 NZ - $\frac{1}{4}$" NYLON PANEL CLIP

PL-2 CABINET CONSTRUCTION SHEDULE		
PART	TYPE	DESCRIPTION
CABINET DOOR	PARTICLE CORE	PLAM-2
CABINET BOX	PARTICLE CORE	3/4" BLACK MELAMINE
CABINET BACK	PARTICLE CORE	1/2" BLACK MELAMINE
DRAWER BOX	PARTICLE CORE	5/8" BLACK MELAMINE
DRAWER BOTTOM	PARTICLE CORE	1/2" BLACK MELAMINE
CABINET HINGE	BLUM 110° 71B3590	FULL OVERLAY
DRAWER SLIDE	BLUM TANDEM 563H	UNDERMOUNT
EXPOSED EDGEBANDING	.5MM	PLAM-2
SEMI EXPOSED EDGEBANDING	.5MM	BLACK PVC
ALL CABINET JOINTS GLUED AND DOWLED		

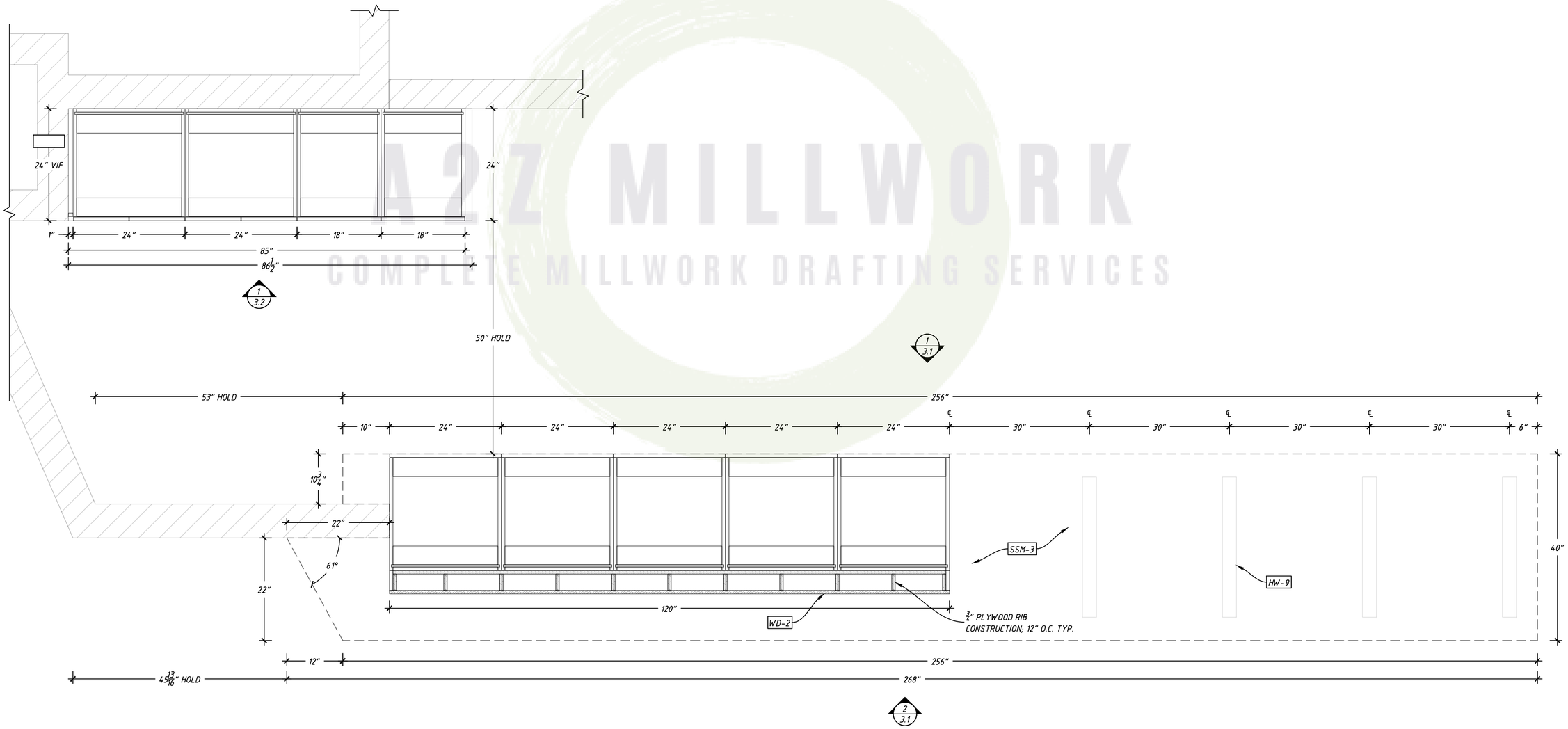

1 3.0 LEASING 221S - PLAN
SCALE: 3/4"=1'-0"

A2Z MILLWORK
COMPLETE MILLWORK DRAFTING SERVICES

MANUFACTURER: A2Z MILLWORK LLC

PROJECT:

REVISIONS

JOB #: 190412

DATE: 10/5/2020

DRAWN BY: A2Z

SHEET: LEASING 221S

SHEET: 3.0

COPYRIGHT © A2Z MILLWORK LLC 2019

MASTER MATERIAL SCHEDULE	
TAG	NOTES:
SSM-3	SOLID SURFACE - ERIK RUEDA DESIGN LAB - RESIN/ EPOXY
WD-2	$\frac{3}{4}$" STAINED OAK VENEER PANEL - DARK GREY
PL-2	LAMINART - SMOKED CHARCOAL BURLAP
HW-2	DRAWER PULL - DOUG MOCKETT - DP269A - BLACK
HW-6	TRASH PULLOUT - REVASHELF - RV15PB2S
HW-9	TABLE LEGS - SYMMETRY HARDWARE - 17" T x 20" W
HW-11	Z CLIP - STAR HANGER - 400 NZ - $\frac{1}{4}$" NYLON PANEL CLIP

PL-2 CABINET CONSTRUCTION SHEDULE		
PART	TYPE	DESCRIPTION
CABINET DOOR	PARTICLE CORE	PLAM-2
CABINET BOX	PARTICLE CORE	3/4" BLACK MELAMINE
CABINET BACK	PARTICLE CORE	1/2" BLACK MELAMINE
DRAWER BOX	PARTICLE CORE	5/8" BLACK MELAMINE
DRAWER BOTTOM	PARTICLE CORE	1/2" BLACK MELAMINE
CABINET HINGE	BLUM 110° 71B3590	FULL OVERLAY
DRAWER SLIDE	BLUM TANDEM 563H	UNDERMOUNT
EXPOSED EDGEBANDING	.5MM	PLAM-2
SEMI EXPOSED EDGEBANDING	.5MM	BLACK PVC
ALL CABINET JOINTS GLUED AND DOWLED		

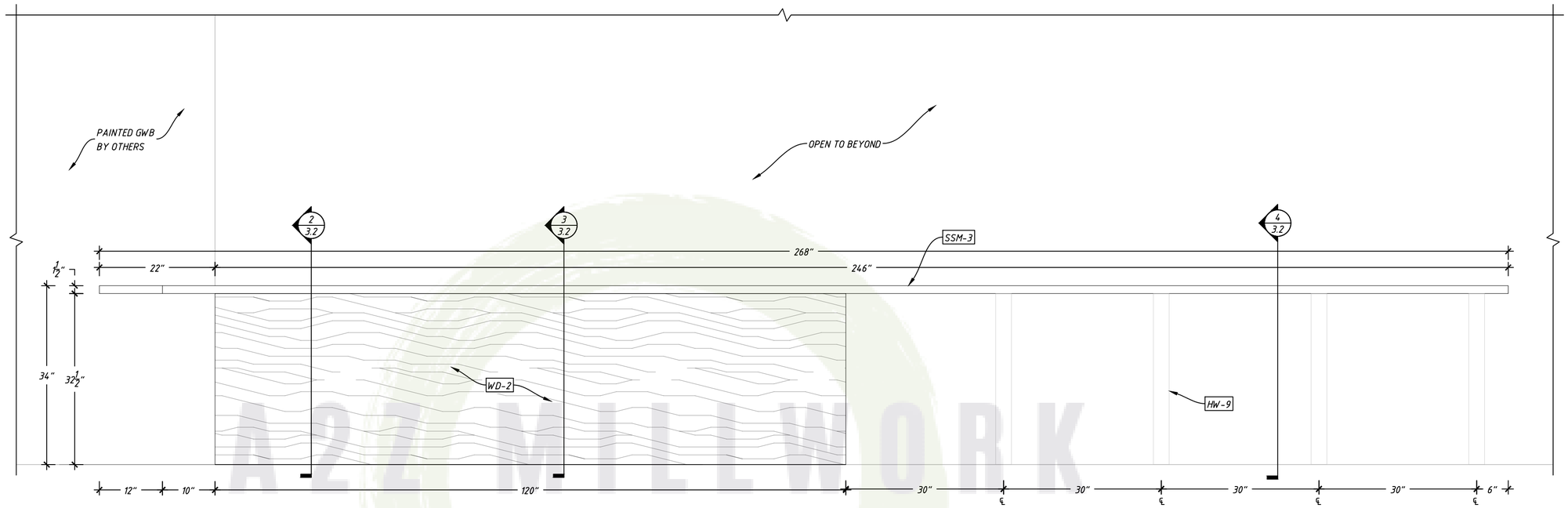

2 3.1 LEASING 221S - ELEVATION
SCALE: 3/4" = 1'-0"

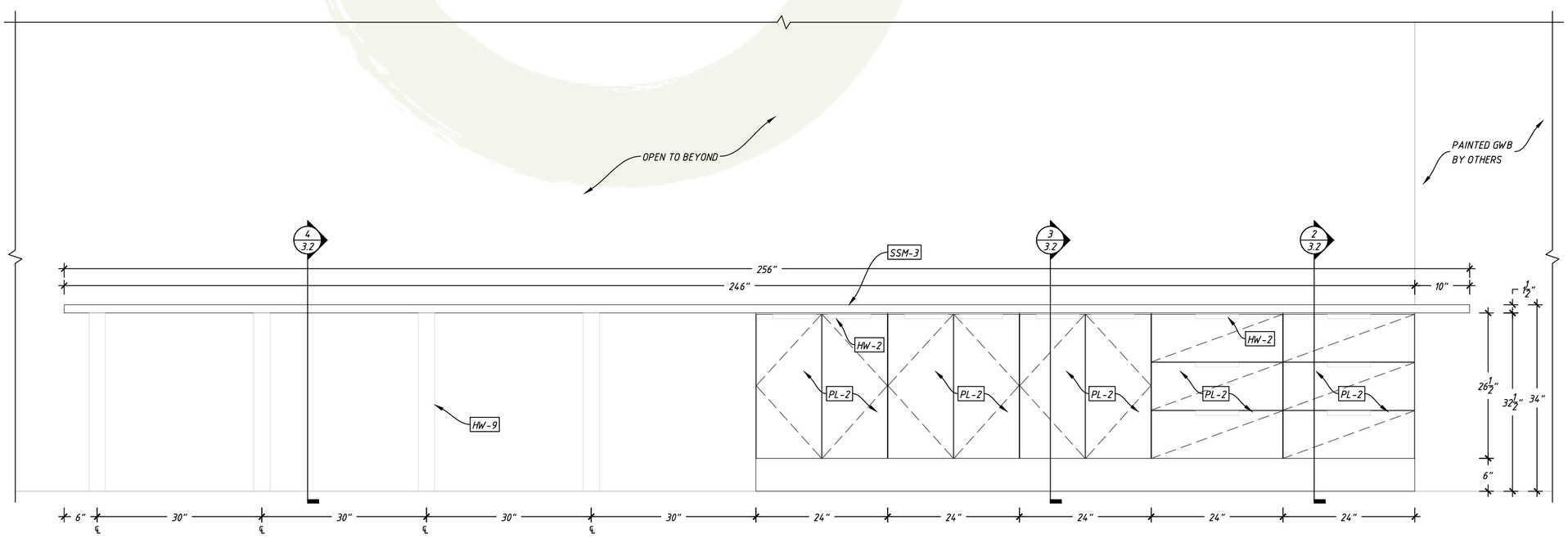

1 3.1 LEASING 221S - ELEVATION
SCALE: 3/4" = 1'-0"

A2Z MILLWORK
COMPLETE MILLWORK DRAFTING SERVICES

MANUFACTURER:
A2Z MILLWORK LLC

PROJECT:

REVISIONS

JOB #: 190412
DATE: 10/5/2020
DRAWN BY: A2Z

SHEET:
LEASING 221S

SHEET:
3.1

COPYRIGHT © A2Z MILLWORK LLC 2019

MASTER MATERIAL SCHEDULE	
TAG	NOTES:
SSM-3	SOLID SURFACE - ERIK RUEDA DESIGN LAB - RESIN/ EPOXY
WD-2	$\frac{3}{4}$" STAINED OAK VENEER PANEL - DARK GREY
PL-2	LAMINART - SMOKED CHARCOAL BURLAP
HW-2	DRAWER PULL - DOUG MOCKETT - DP269A - BLACK
HW-6	TRASH PULLOUT - REVASHELF - RV15PB2S
HW-9	TABLE LEGS - SYMMETRY HARDWARE - 17" T x 20" W
HW-11	Z CLIP - STAR HANGER - 400 NZ - $\frac{1}{4}$" NYLON PANEL CLIP

PL-2 CABINET CONSTRUCTION SHEDULE		
PART	TYPE	DESCRIPTION
CABINET DOOR	PARTICLE CORE	PLAM-2
CABINET BOX	PARTICLE CORE	3/4" BLACK MELAMINE
CABINET BACK	PARTICLE CORE	1/2" BLACK MELAMINE
DRAWER BOX	PARTICLE CORE	5/8" BLACK MELAMINE
DRAWER BOTTOM	PARTICLE CORE	1/2" BLACK MELAMINE
CABINET HINGE	BLUM 110° 71B3590	FULL OVERLAY
DRAWER SLIDE	BLUM TANDEM 563H	UNDERMOUNT
EXPOSED EDGEBANDING	.5MM	PLAM-2
SEMI EXPOSED EDGEBANDING	.5MM	BLACK PVC
ALL CABINET JOINTS GLUED AND DOWLED		

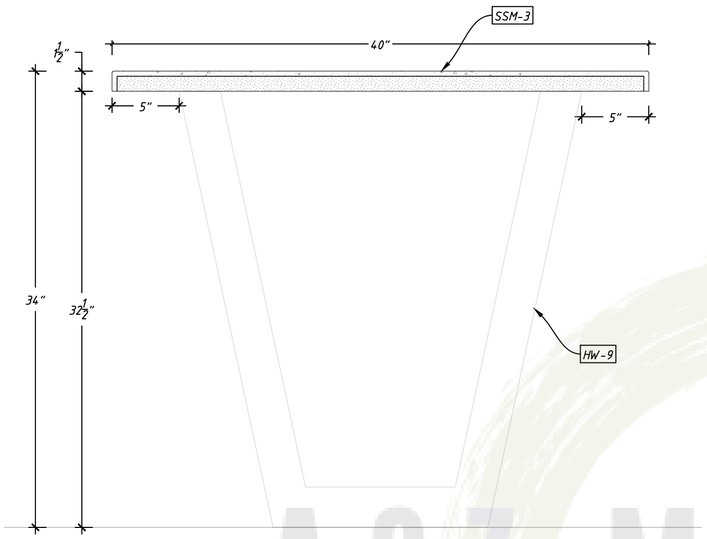

4 LEASING 221S - SECTION
3.2 SCALE: 1-1/2"=1'-0"

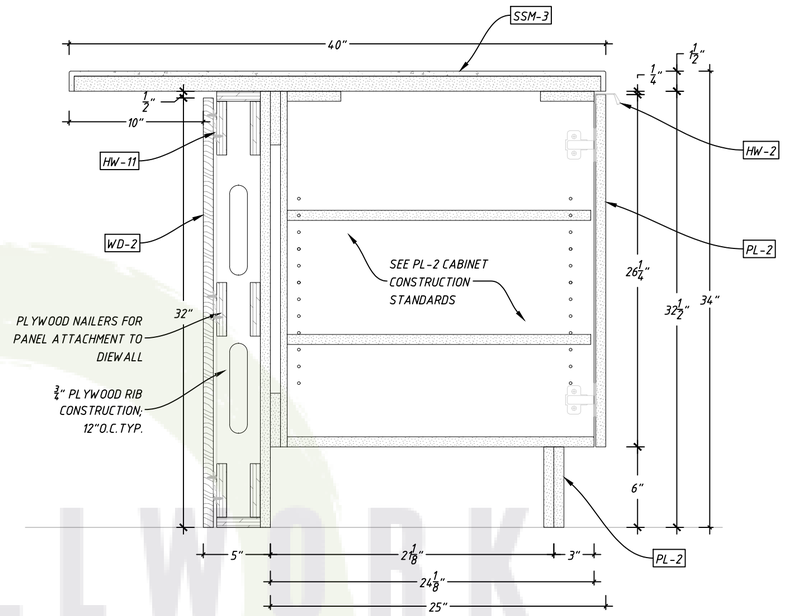

3 LEASING 221S - SECTION
3.2 SCALE: 1-1/2"=1'-0"

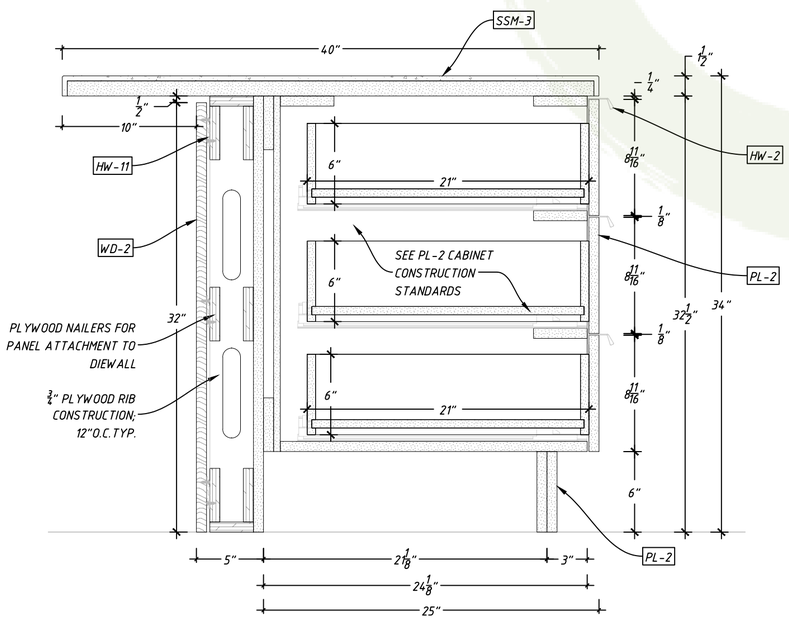

2 LEASING 221S - SECTION
3.2 SCALE: 1-1/2"=1'-0"

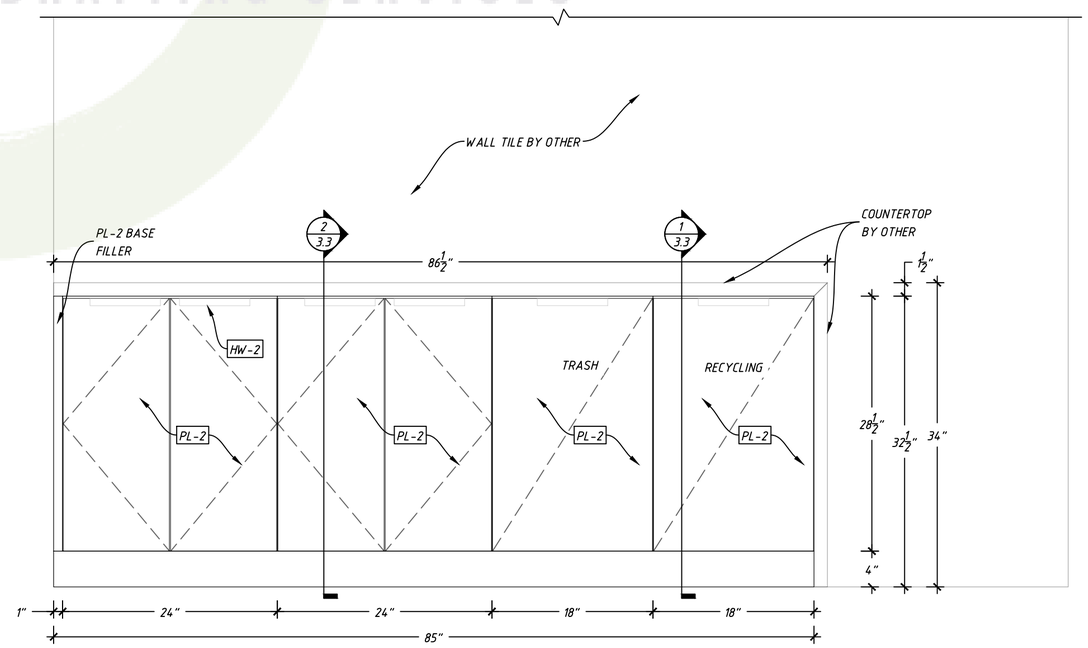

1 LEASING 221S - ELEVATION
3.2 SCALE: 1" = 1'-0"

A2Z MILLWORK
COMPLETE MILLWORK DRAFTING SERVICES

MANUFACTURER: A2Z MILLWORK LLC

PROJECT:

REVISIONS

JOB #: 190412
DATE: 10/5/2020
DRAWN BY: A2Z

SHEET: LEASING 221S

SHEET: 3.2

COPYRIGHT © A2Z MILLWORK LLC 2019

MASTER MATERIAL SCHEDULE	
TAG	NOTES:
SSM-3	SOLID SURFACE - ERIK RUEDA DESIGN LAB - RESIN/ EPOXY
WD-2	$\frac{3}{4}$" STAINED OAK VENEER PANEL - DARK GREY
PL-2	LAMINART - SMOKED CHARCOAL BURLAP
HW-2	DRAWER PULL - DOUG MOCKETT - DP269A - BLACK
HW-6	TRASH PULLOUT - REVASHELF - RV15PB2S
HW-9	TABLE LEGS - SYMMETRY HARDWARE - 17" T x 20" W
HW-11	Z CLIP - STAR HANGER - 400 NZ - $\frac{1}{4}$" NYLON PANEL CLIP

PL-2 CABINET CONSTRUCTION SHEDULE		
PART	TYPE	DESCRIPTION
CABINET DOOR	PARTICLE CORE	PLAM-2
CABINET BOX	PARTICLE CORE	3/4" BLACK MELAMINE
CABINET BACK	PARTICLE CORE	1/2" BLACK MELAMINE
DRAWER BOX	PARTICLE CORE	5/8" BLACK MELAMINE
DRAWER BOTTOM	PARTICLE CORE	1/2" BLACK MELAMINE
CABINET HINGE	BLUM 110° 71B3590	FULL OVERLAY
DRAWER SLIDE	BLUM TANDEM 563H	UNDERMOUNT
EXPOSED EDGEBANDING	.5MM	PLAM-2
SEMI EXPOSED EDGEBANDING	.5MM	BLACK PVC
ALL CABINET JOINTS GLUED AND DOWLED		

A2Z MILLWORK
COMPLETE MILLWORK DRAFTING SERVICES

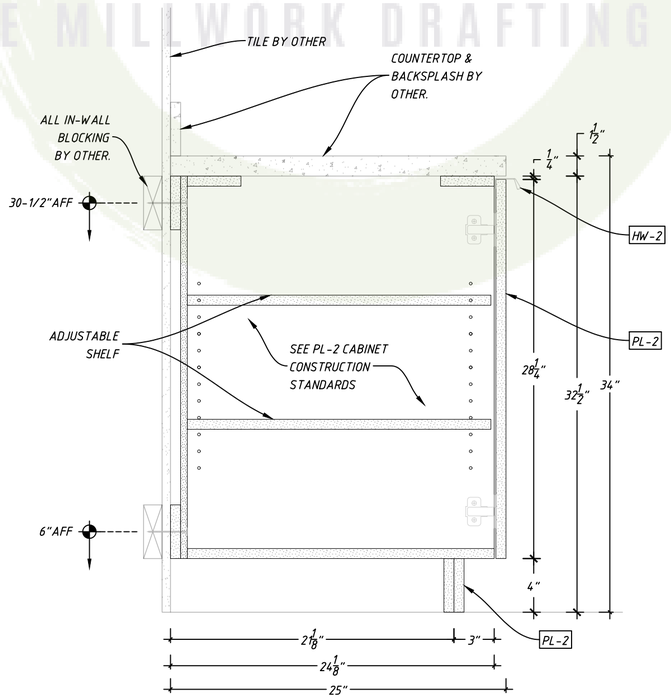

2 / 3.3 LEASING 221S - SECTION
SCALE: 1-1/2"=1'-0"

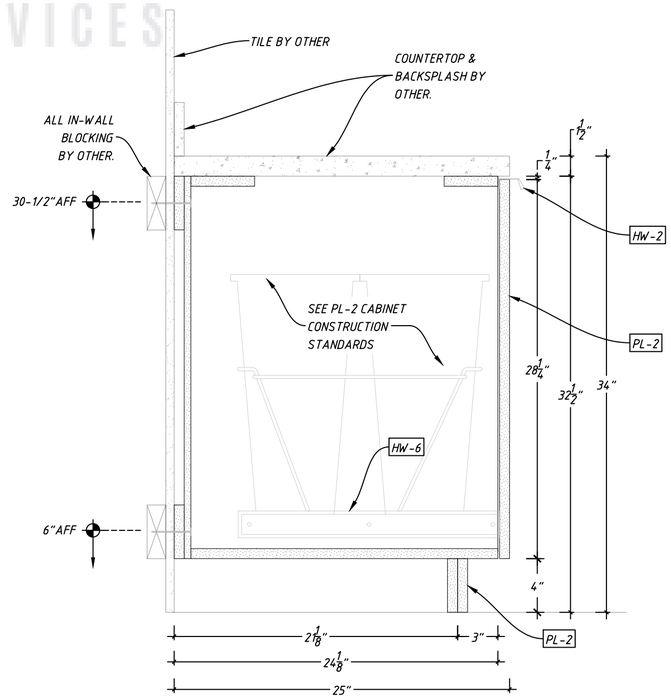

1 / 3.3 LEASING 221S - SECTION
SCALE: 1-1/2"=1'-0"

A2Z MILLWORK
COMPLETE MILLWORK DRAFTING SERVICES

MANUFACTURER: A2Z MILLWORK LLC

PROJECT:

REVISIONS

JOB #: 190412
DATE: 10/5/2020
DRAWN BY: A2Z

SHEET: LEASING 221S

SHEET: 3.3

COPYRIGHT © A2Z MILLWORK LLC 2019

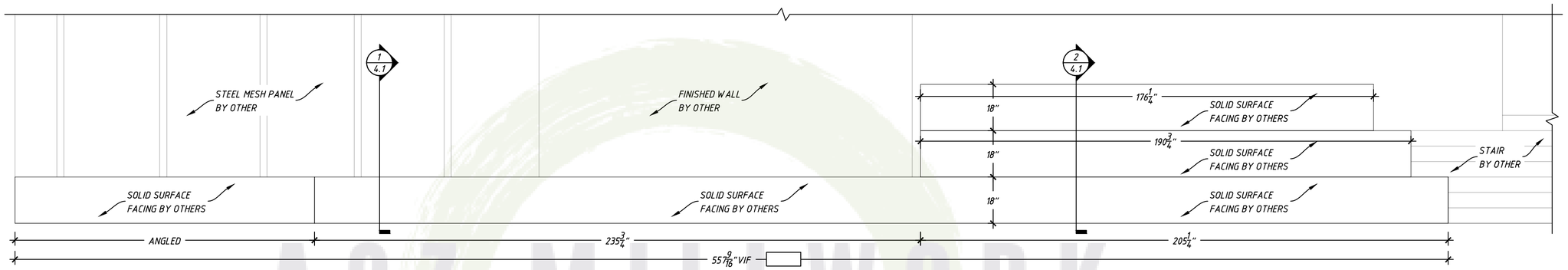

2 / 4.0 MAIN LOBBY 227S - ELEVATION
SCALE: 3/8" = 1'-0"

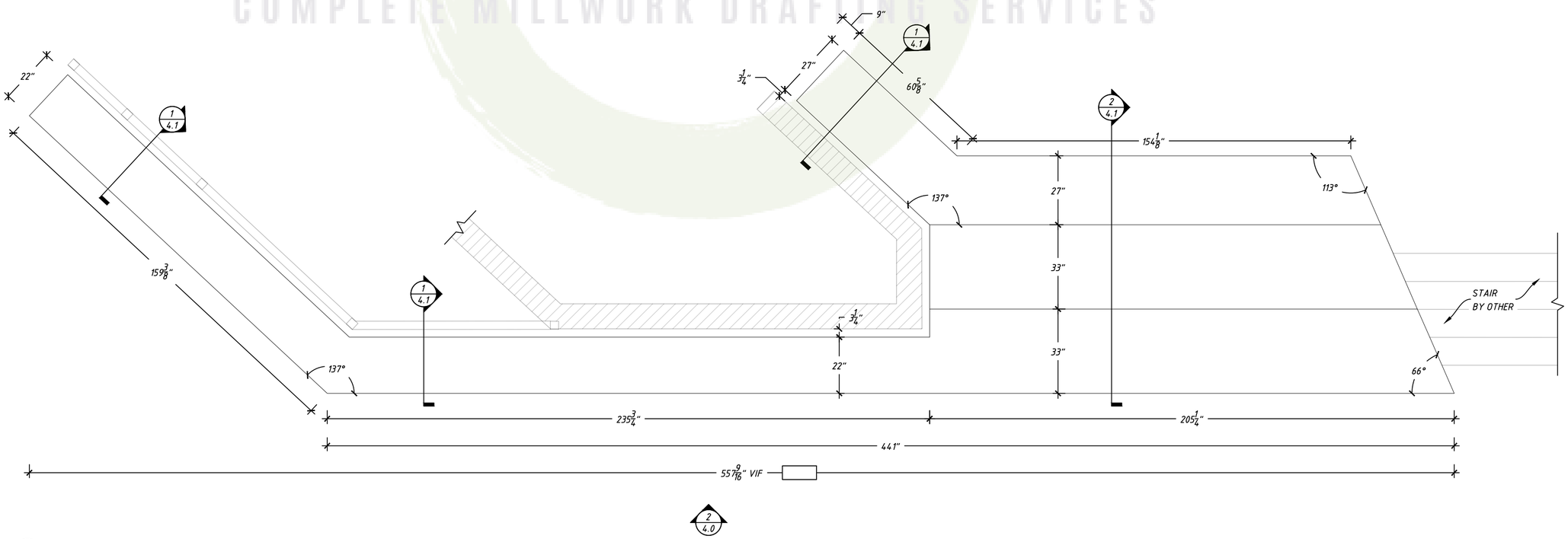

1 / 4.0 MAIN LOBBY 227S - PLAN
SCALE: 3/8" = 1'-0"

A2Z MILLWORK
COMPLETE MILLWORK DRAFTING SERVICES

MANUFACTURER:
A2Z MILLWORK LLC

PROJECT:

REVISIONS

JOB #: 190412
DATE: 10/5/2020
DRAWN BY: A2Z

SHEET:
MAIN LOBBY
227S

SHEET:
4.0

COPYRIGHT © A2Z MILLWORK LLC 2019

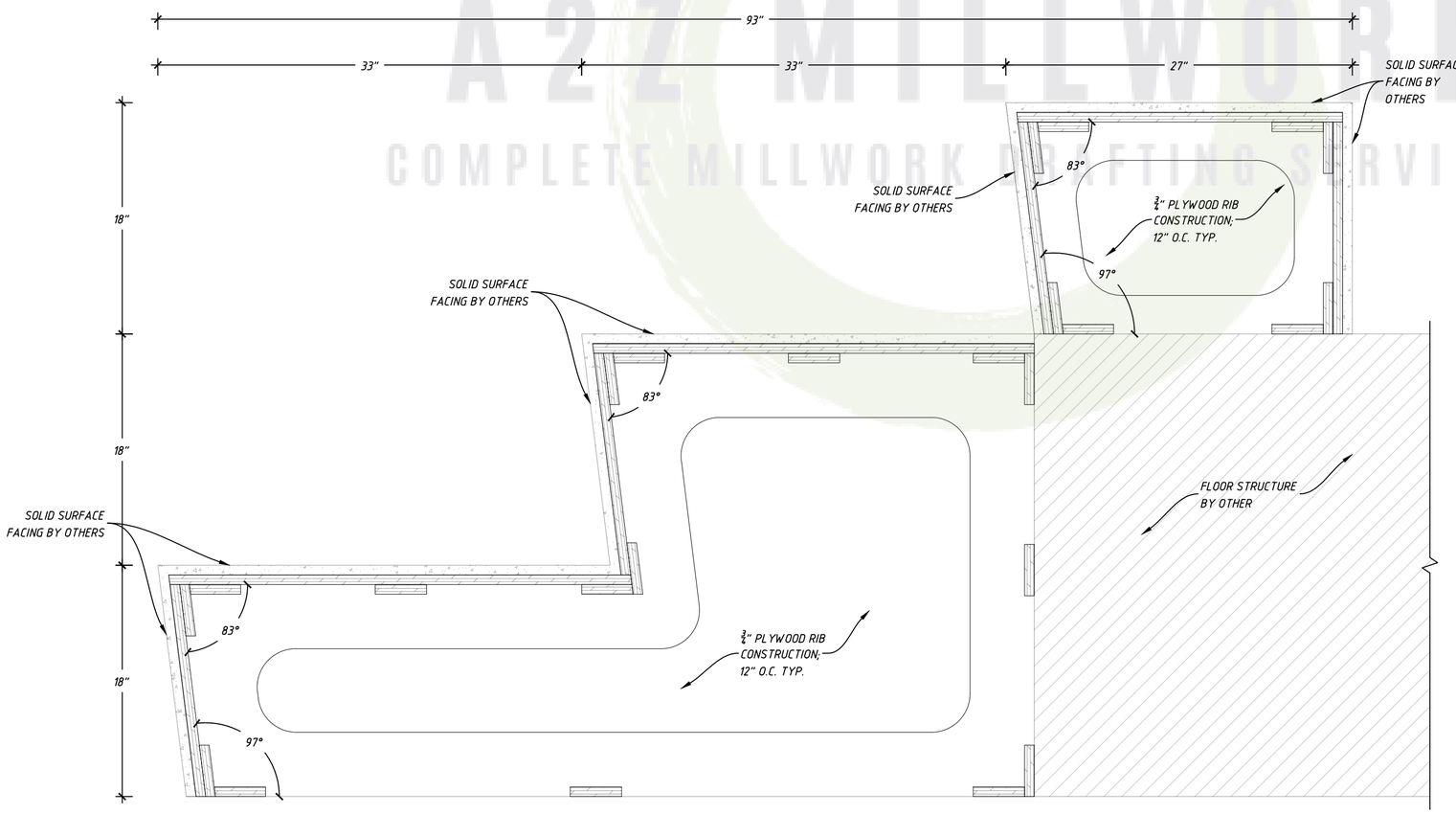

2 SECTION
4.1 SCALE: 1-1/2"=1'-0"

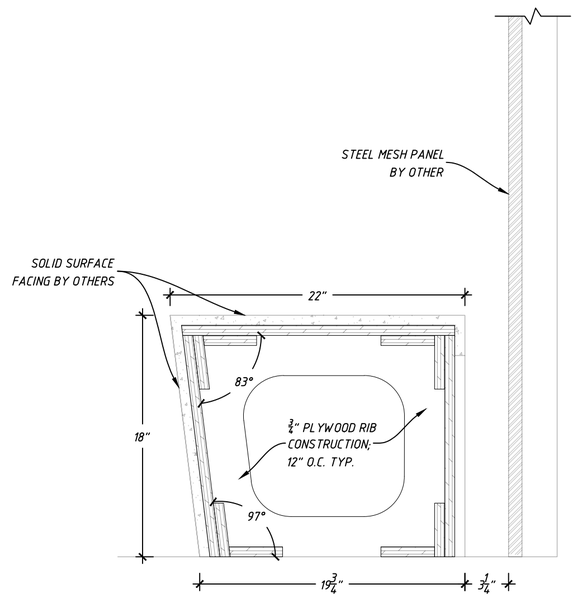

1 SECTION
4.1 SCALE: 1-1/2"=1'-0"

A2Z MILLWORK
COMPLETE MILLWORK DRAFTING SERVICES

MANUFACTURER:
A2Z MILLWORK LLC

PROJECT:

REVISIONS

JOB #: 190412

DATE: 10/5/2020

DRAWN BY: A2Z

SHEET:
MAIN LOBBY
227S

SHEET:
4.1

COPYRIGHT © A2Z MILLWORK LLC 2019

MASTER MATERIAL SCHEDULE	
TAG	NOTES:
WD-2	$\frac{3}{4}$" STAINED OAK VENEER PANEL - DARK GREY
HW-9	TABLE LEGS - SYMMETRY HARDWARE - 17" T x 20" W

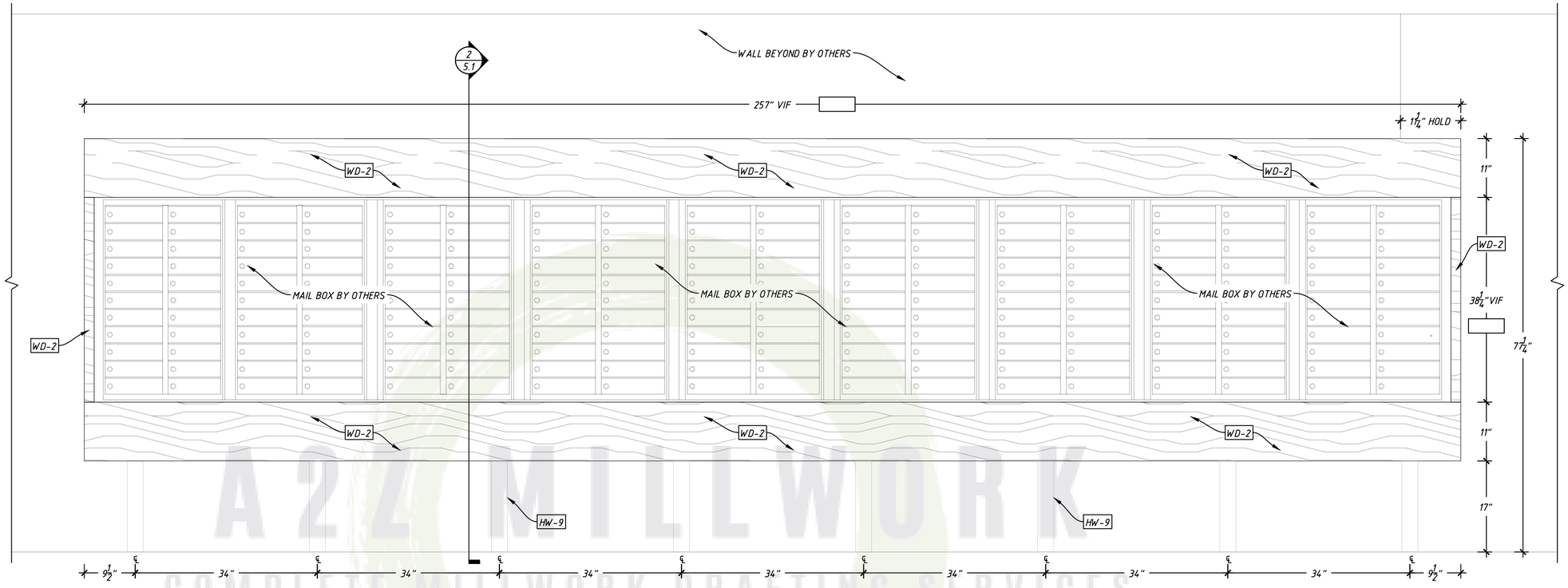

2 / 5.0 MAIL ROOM/LOUNGE 230S - ELEVATION
SCALE: 3/4" = 1'-0"

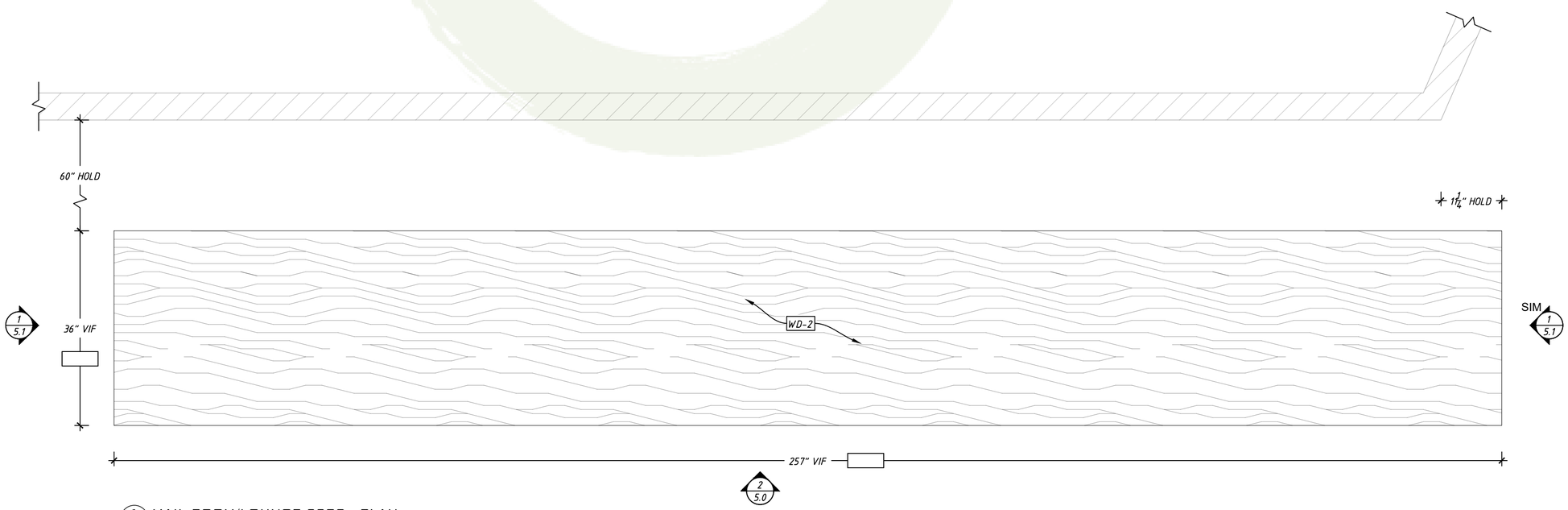

1 / 5.0 MAIL ROOM/LOUNGE 230S - PLAN
SCALE: 3/4" = 1'-0"

A2Z MILLWORK
COMPLETE MILLWORK DRAFTING SERVICES

MANUFACTURER: A2Z MILLWORK LLC

PROJECT:

REVISIONS

JOB #: 190412
DATE: 10/5/2020
DRAWN BY: A2Z

SHEET: MAIL ROOM/LOUNGE 230S

SHEET: 5.0

COPYRIGHT © A2Z MILLWORK LLC 2019

MASTER MATERIAL SCHEDULE	
TAG	NOTES:
WD-2	$\frac{3}{4}$" STAINED OAK VENEER PANEL - DARK GREY
HW-9	TABLE LEGS - SYMMETRY HARDWARE - 17" T x 20" W

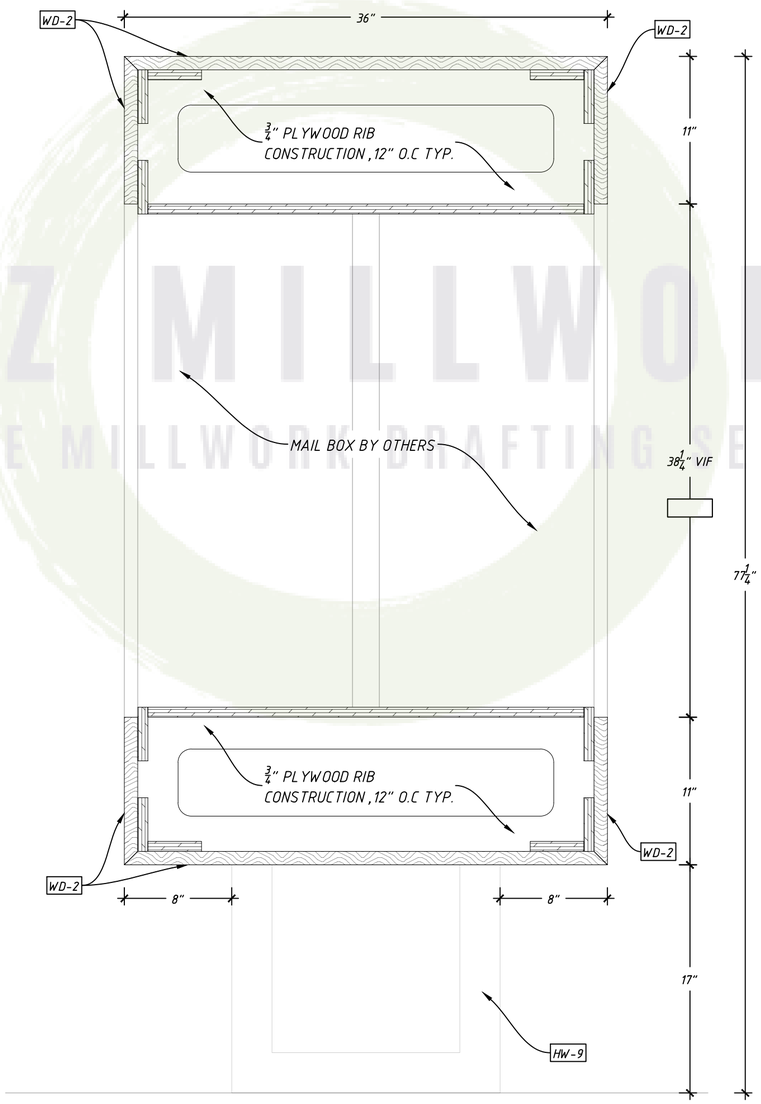

2 / 5.1 SECTION
SCALE: 1-1/2" = 1'-0"

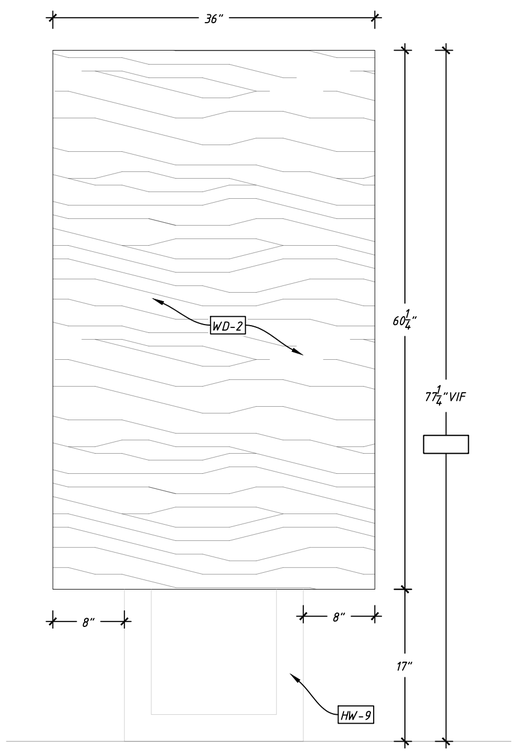

1 / 5.1 MAIL ROOM/LOUNGE 230S - ELEVATION
SCALE: 1" = 1'-0"

A2Z MILLWORK
COMPLETE MILLWORK DRAFTING SERVICES

MANUFACTURER:
A2Z MILLWORK LLC

PROJECT:

REVISIONS

JOB #: 190412
DATE: 10/5/2020
DRAWN BY: A2Z

SHEET:
MAIL ROOM/LOUNGE 230S

SHEET:
5.1

COPYRIGHT © A2Z MILLWORK LLC 2019

MASTER MATERIAL SCHEDULE	
TAG	NOTES:
WD-1	$\frac{3}{4}$" SANDED/SATIN FINISHED OSB APPLIED PANEL
HW-11	Z CLIP - STAR HANGER - 400 NZ - $\frac{1}{4}$" NYLON PANEL CLIP
HW-10	BLIND DOOR HARDWARE - RICHELIEU - TBD

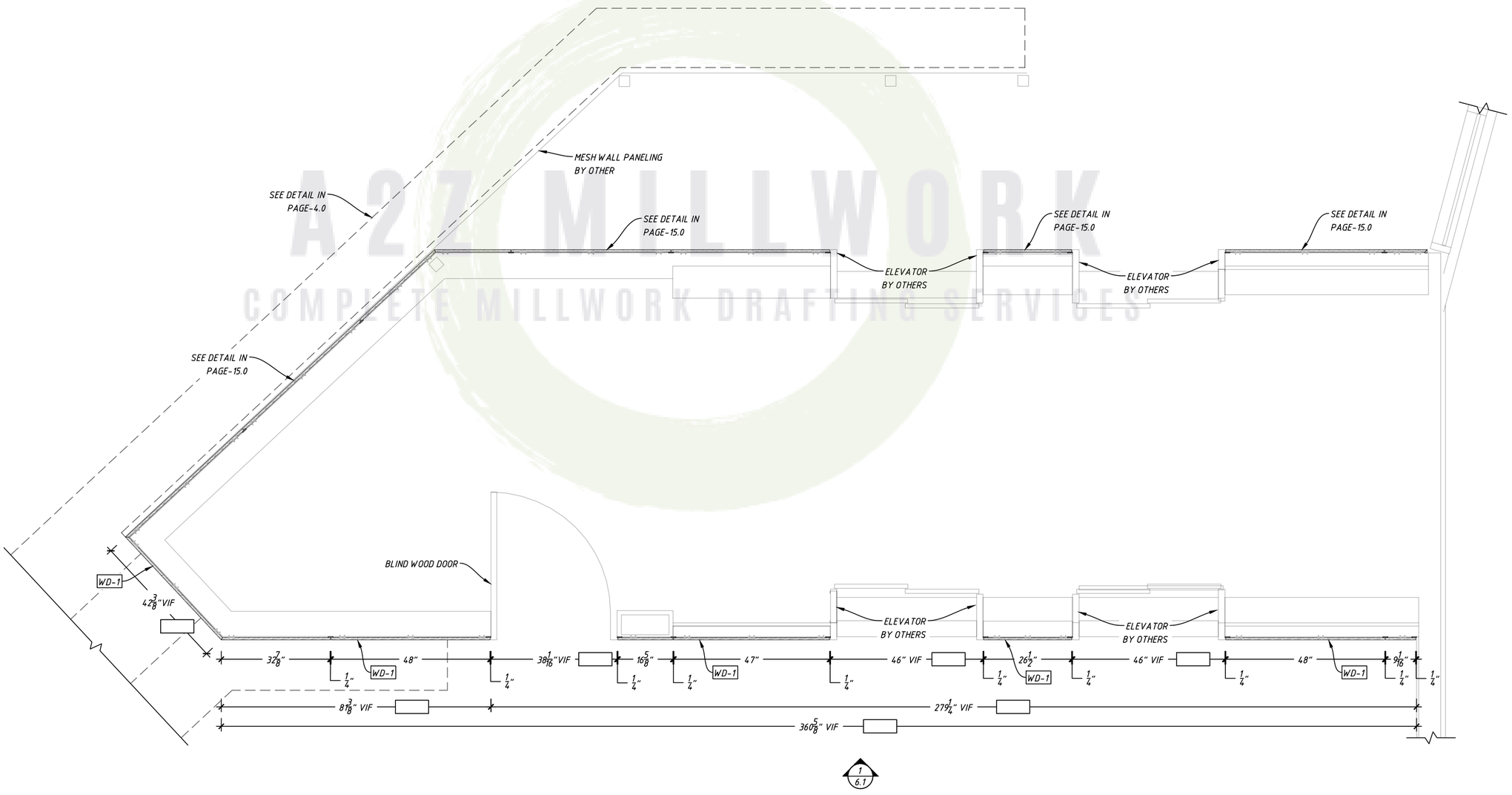

1 / 6.0 ELEVATOR LOBBY AT LOUNGE - PLAN
SCALE: 1/2" = 1'-0"

MANUFACTURER: A2Z MILLWORK LLC

PROJECT:

REVISIONS

JOB #:	190412
DATE:	10/5/2020
DRAWN BY:	A2Z

SHEET: ELEVATOR LOBBY AT LOUNGE (GROUND FLOOR LOBBY)

SHEET: 6.0

COPYRIGHT © A2Z MILLWORK LLC 2019

MASTER MATERIAL SCHEDULE	
TAG	NOTES:
WD-1	3/4" SANDED/SATIN FINISHED OSB APPLIED PANEL
HW-11	Z CLIP - STAR HANGER - 400 NZ - 1/4" NYLON PANEL CLIP
HW-10	BLIND DOOR HARDWARE - RICHELIEU - TBD

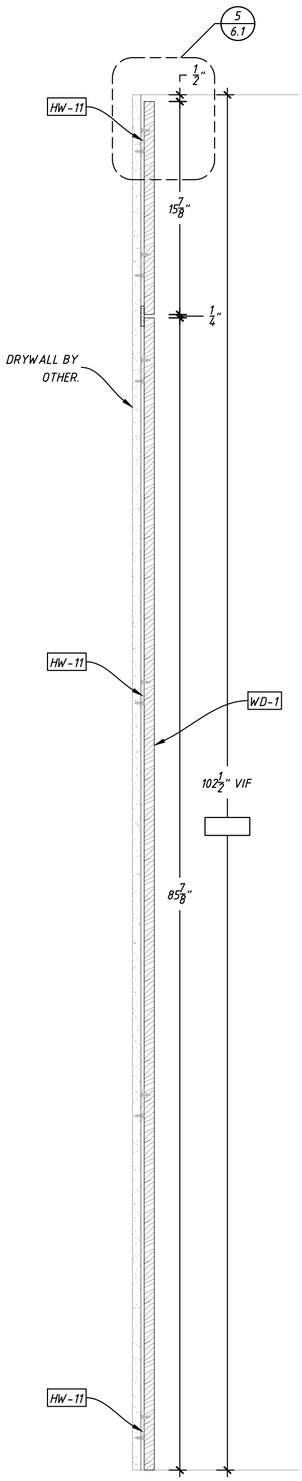

2 SECTION
6.1 SCALE: 1-1/2"=1'-0"

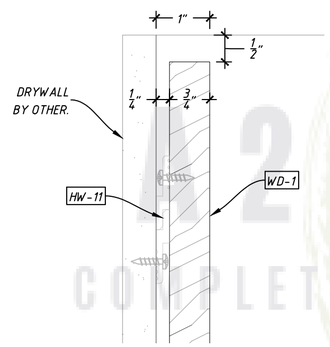

5 DETAIL
6.1 SCALE: 6"=1'

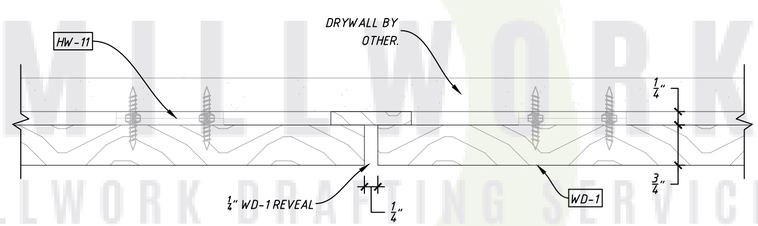

4 SECTION
6.1 SCALE: 6"=1'-0"

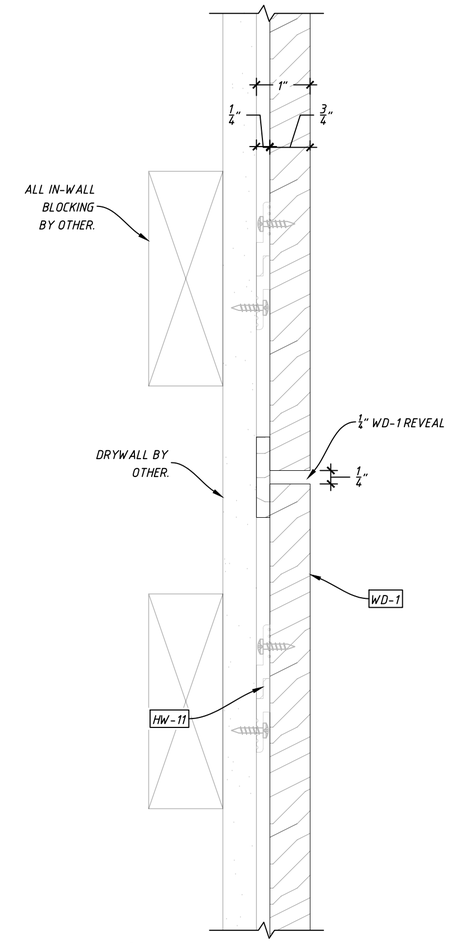

3 SECTION
6.1 SCALE: 6"=1'-0"

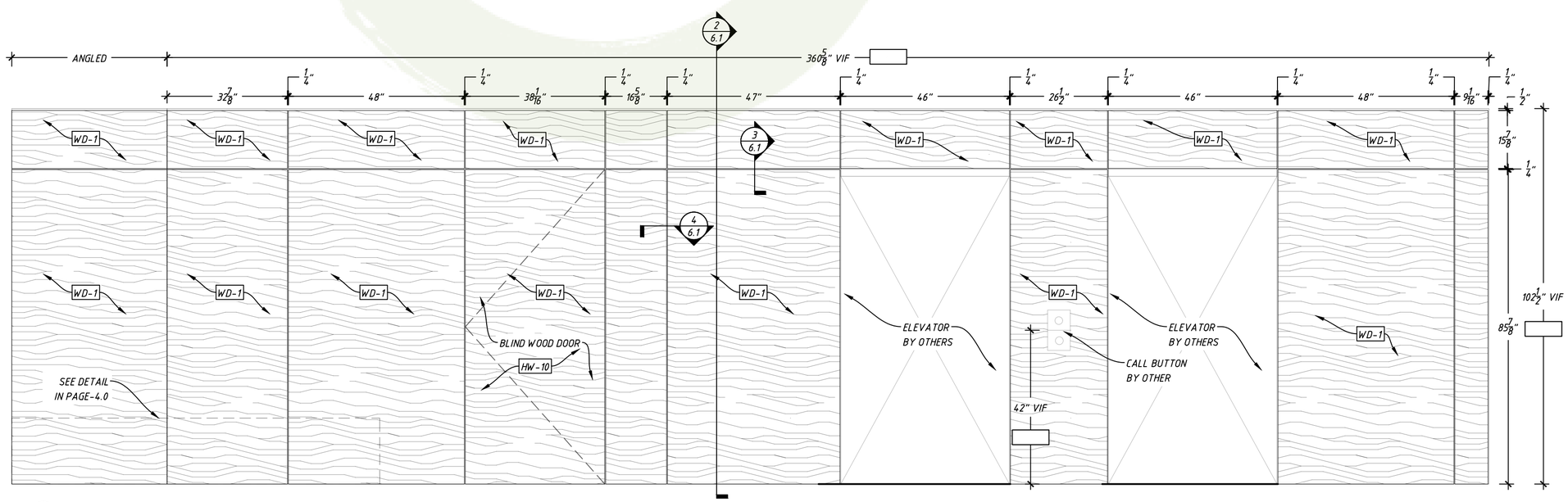

1 ELEVATOR LOBBY AT LOUNGE - ELEVATION
6.1 SCALE: 1/2" = 1'-0"

A2Z MILLWORK
COMPLETE MILLWORK DRAFTING SERVICES

MANUFACTURER:
A2Z MILLWORK LLC

PROJECT:

REVISIONS

JOB #:	190412
DATE:	10/5/2020
DRAWN BY:	A2Z

SHEET:
ELEVATOR LOBBY AT LOUNGE (GROUND FLOOR LOBBY)

SHEET:
6.1

COPYRIGHT © A2Z MILLWORK LLC 2019

MASTER MATERIAL SCHEDULE	
TAG	NOTES:
WD-3	$\frac{3}{4}$" STAINED WOOD VENEER PANEL - TBD
WP-1	$\frac{1}{4}$" CORK BOARD
PL-2	LAMINART - SMOKED CHARCOAL BURLAP
HW-2	DRAWER PULL - DOUG MOCKETT - DP269A - BLACK
HW-11	Z CLIP - STAR HANGER - 400 NZ - $\frac{1}{4}$" NYLON PANEL CLIP

PL-2 CABINET CONSTRUCTION SHEDULE		
PART	TYPE	DESCRIPTION
CABINET DOOR	PARTICLE CORE	PLAM-2
CABINET BOX	PARTICLE CORE	3/4" BLACK MELAMINE
CABINET BACK	PARTICLE CORE	1/2" BLACK MELAMINE
DRAWER BOX	PARTICLE CORE	5/8" BLACK MELAMINE
DRAWER BOTTOM	PARTICLE CORE	1/2" BLACK MELAMINE
CABINET HINGE	BLUM 110° 71B3590	FULL OVERLAY
DRAWER SLIDE	BLUM TANDEM 563H	UNDERMOUNT
EXPOSED EDGEBANDING	.5MM	PLAM-2
SEMI EXPOSED EDGEBANDING	.5MM	BLACK PVC
ALL CABINET JOINTS GLUED AND DOWLED		

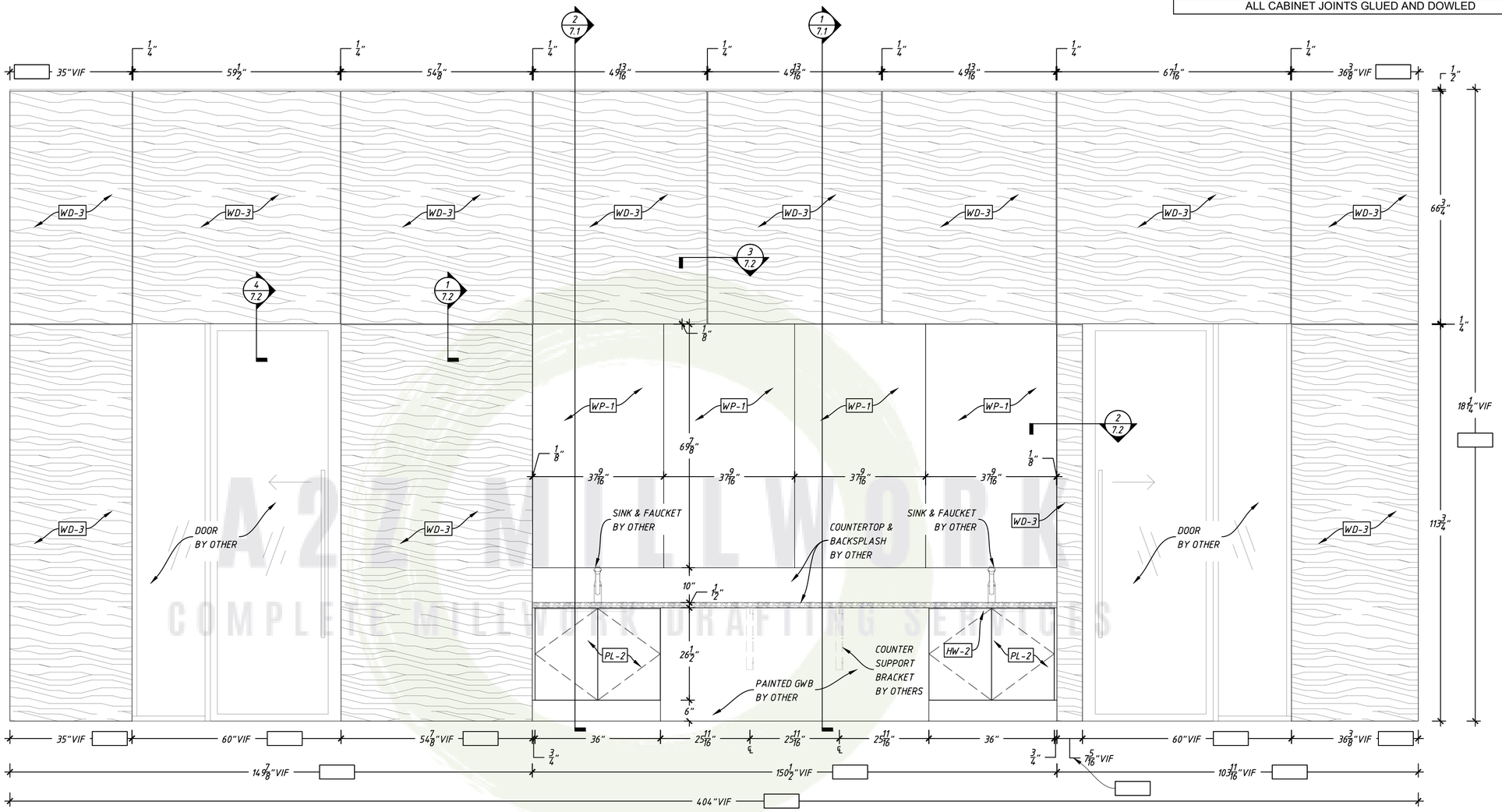

1 / 7.0 MAKER SPACE 231S - ELEVATION
SCALE: 1/2" = 1'-0"

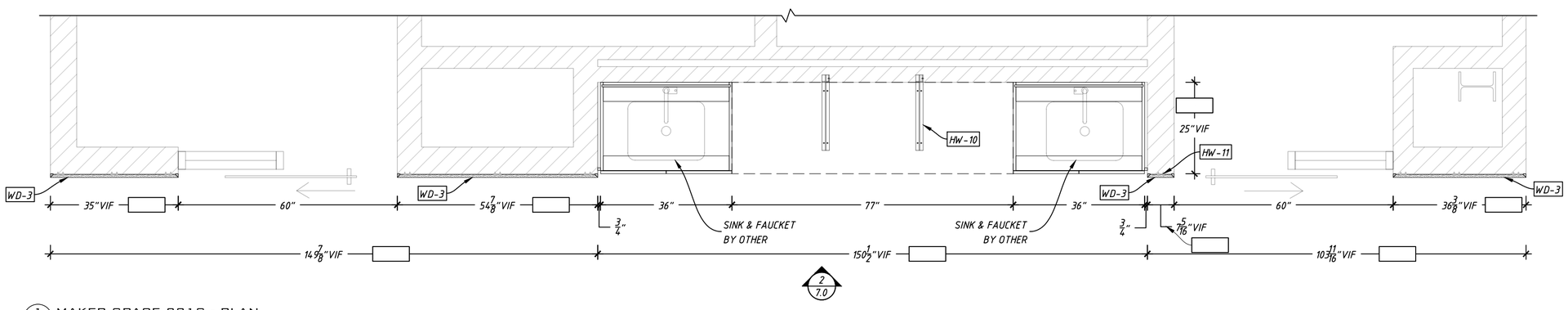

1 / 7.0 MAKER SPACE 231S - PLAN
SCALE: 1/2" = 1'-0"

A2Z MILLWORK
COMPLETE MILLWORK DRAFTING SERVICES

MANUFACTURER:
A2Z MILLWORK LLC

PROJECT:

REVISIONS

JOB #: 190412
DATE: 10/5/2020
DRAWN BY: A2Z

SHEET:
MAKER SPACE 231S

SHEET:
7.0

COPYRIGHT © A2Z MILLWORK LLC 2019

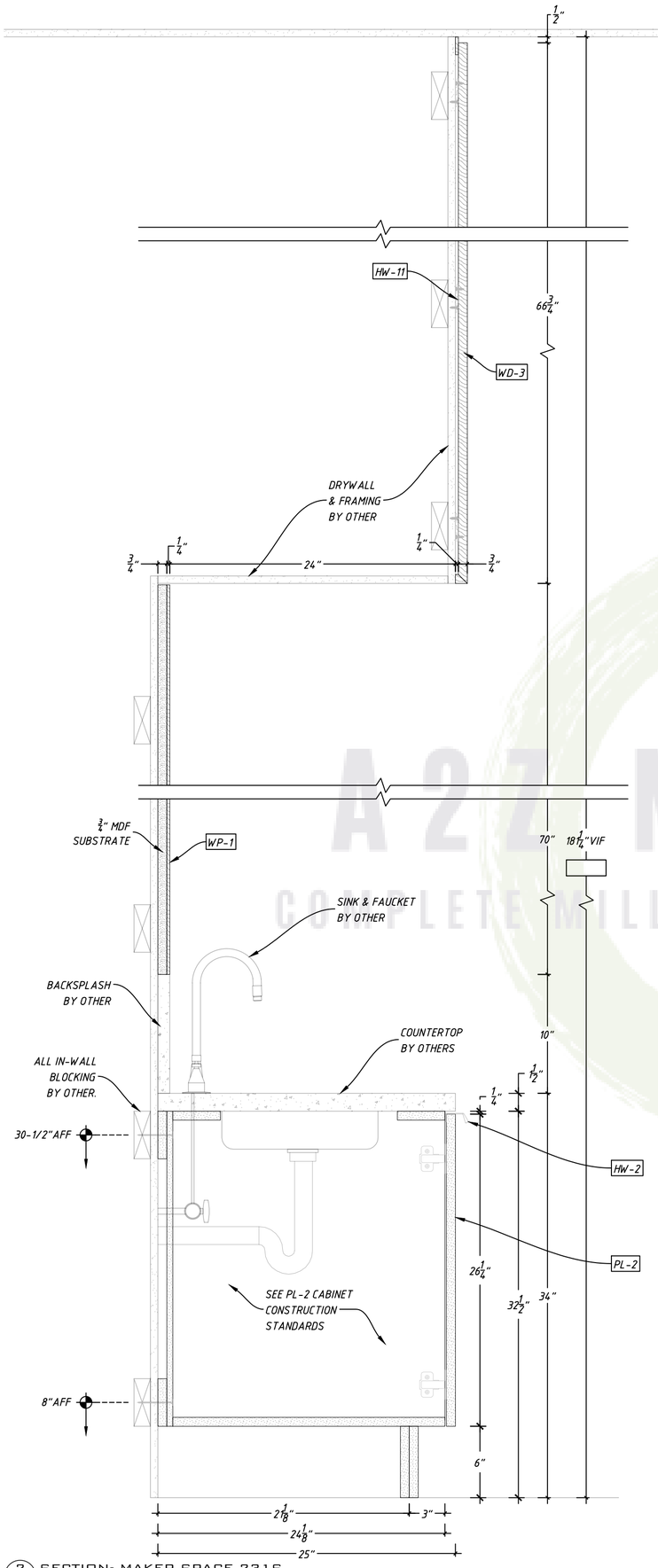

2 / 7.1 SECTION- MAKER SPACE 231S
SCALE: 1-1/2"=1'-0"

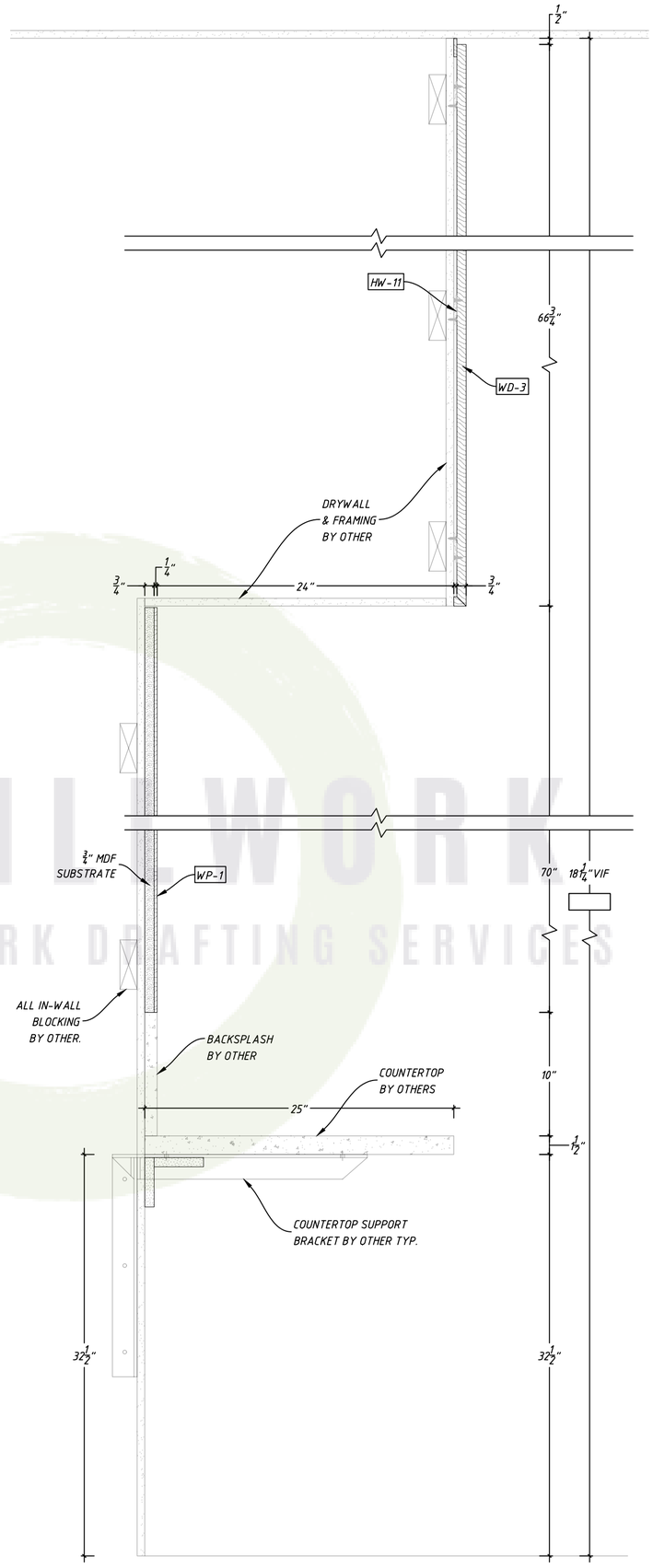

1 / 7.1 SECTION- MAKER SPACE 231S
SCALE: 1-1/2"=1'-0"

PL-2 CABINET CONSTRUCTION SHEDULE		
PART	TYPE	DESCRIPTION
CABINET DOOR	PARTICLE CORE	PLAM-2
CABINET BOX	PARTICLE CORE	3/4" BLACK MELAMINE
CABINET BACK	PARTICLE CORE	1/2" BLACK MELAMINE
DRAWER BOX	PARTICLE CORE	5/8" BLACK MELAMINE
DRAWER BOTTOM	PARTICLE CORE	1/2" BLACK MELAMINE
CABINET HINGE	BLUM 110° 71B3590	FULL OVERLAY
DRAWER SLIDE	BLUM TANDEM 563H	UNDERMOUNT
EXPOSED EDGEBANDING	.5MM	PLAM-2
SEMI EXPOSED EDGEBANDING	.5MM	BLACK PVC
ALL CABINET JOINTS GLUED AND DOWLED		

MASTER MATERIAL SCHEDULE	
TAG	NOTES:
WD-3	3/4" STAINED WOOD VENEER PANEL - TBD
WP-1	1/4" CORK BOARD
PL-2	LAMINART - SMOKED CHARCOAL BURLAP
HW-2	DRAWER PULL - DOUG MOCKETT - DP269A - BLACK
HW-11	Z CLIP - STAR HANGER - 400 NZ - 1/4" NYLON PANEL CLIP

A2Z MILLWORK
COMPLETE MILLWORK DRAFTING SERVICES

MANUFACTURER:
A2Z MILLWORK LLC

PROJECT:

REVISIONS

JOB #: 190412
DATE: 10/5/2020
DRAWN BY: A2Z

SHEET:
MAKER SPACE
231S

SHEET:
7.1

COPYRIGHT © A2Z MILLWORK LLC 2019

MASTER MATERIAL SCHEDULE	
TAG	NOTES:
WD-3	$\frac{3}{4}$" STAINED WOOD VENEER PANEL - TBD
WP-1	$\frac{1}{4}$" CORK BOARD
PL-2	LAMINART - SMOKED CHARCOAL BURLAP
HW-2	DRAWER PULL - DOUG MOCKETT - DP269A - BLACK
HW-11	Z CLIP - STAR HANGER - 400 NZ - $\frac{1}{4}$" NYLON PANEL CLIP

PL-2 CABINET CONSTRUCTION SHEDULE		
PART	TYPE	DESCRIPTION
CABINET DOOR	PARTICLE CORE	PLAM-2
CABINET BOX	PARTICLE CORE	3/4" BLACK MELAMINE
CABINET BACK	PARTICLE CORE	1/2" BLACK MELAMINE
DRAWER BOX	PARTICLE CORE	5/8" BLACK MELAMINE
DRAWER BOTTOM	PARTICLE CORE	1/2" BLACK MELAMINE
CABINET HINGE	BLUM 110° 71B3590	FULL OVERLAY
DRAWER SLIDE	BLUM TANDEM 563H	UNDERMOUNT
EXPOSED EDGEBANDING	.5MM	PLAM-2
SEMI EXPOSED EDGEBANDING	.5MM	BLACK PVC
ALL CABINET JOINTS GLUED AND DOWLED		

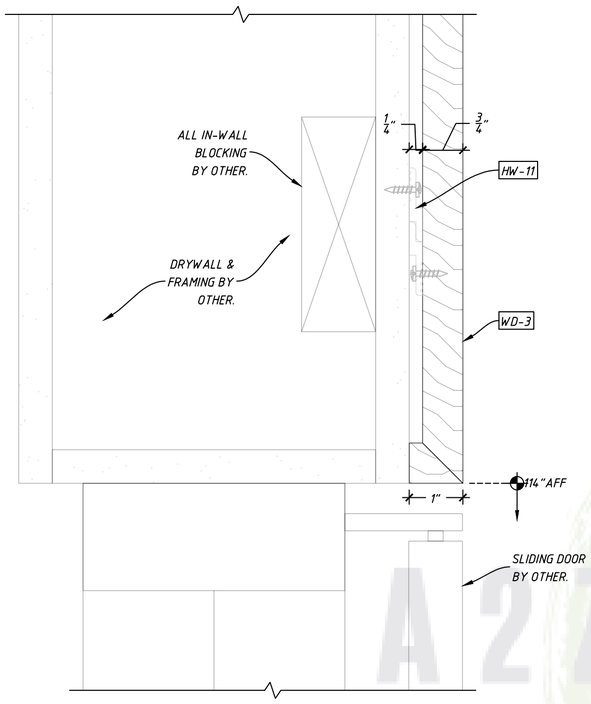

4 SECTION 7.2 SCALE: 6"=1'-0"

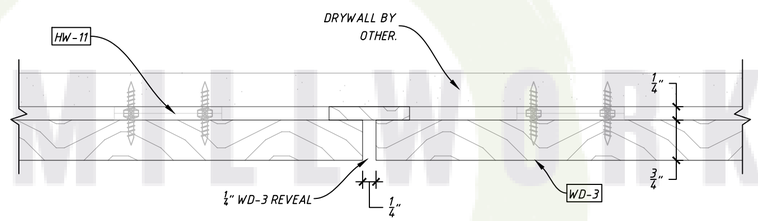

3 SECTION 7.2 SCALE: 6"=1'-0"

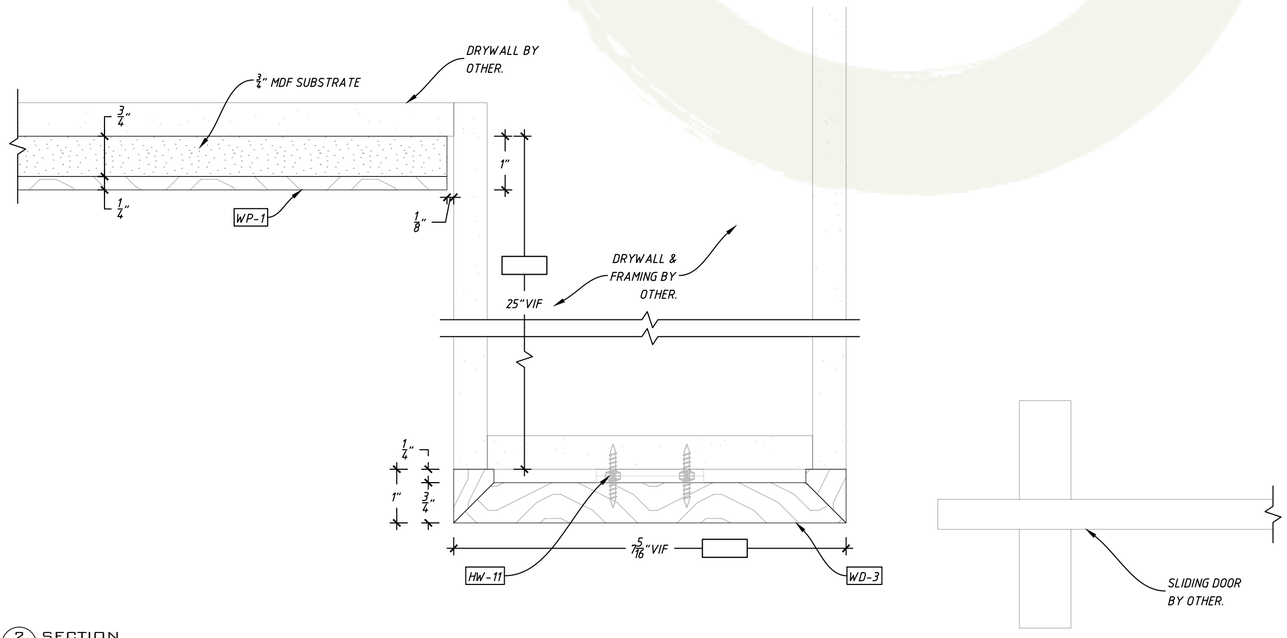

2 SECTION 7.2 SCALE: 6"=1'-0"

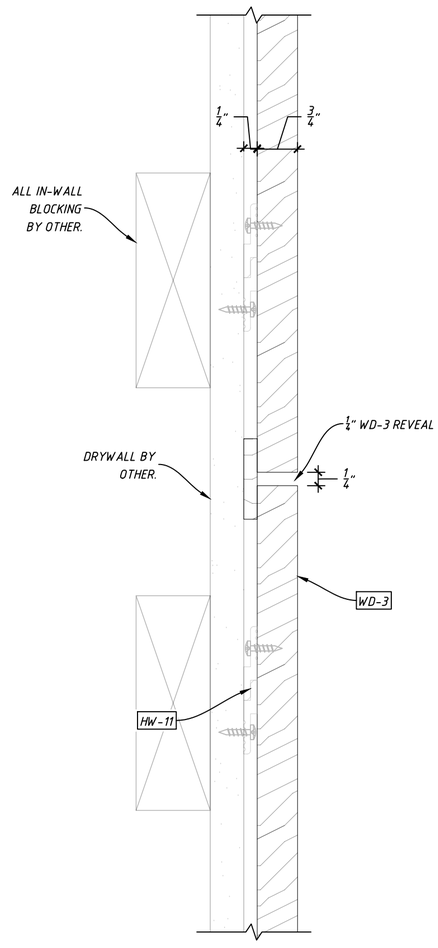

1 SECTION 7.2 SCALE: 6"=1'-0"

A2Z MILLWORK
COMPLETE MILLWORK DRAFTING SERVICES

MANUFACTURER: A2Z MILLWORK LLC

PROJECT:

REVISIONS

JOB #: 190412

DATE: 10/5/2020

DRAWN BY: A2Z

SHEET: MAKER SPACE 231S

SHEET: 7.2

COPYRIGHT © A2Z MILLWORK LLC 2019

MASTER MATERIAL SCHEDULE	
TAG	NOTES:
WP-1	$\frac{1}{4}$" CORK BOARD
PL-2	LAMINART - SMOKED CHARCOAL BURLAP
TR-1	$\frac{3}{4}$"X3" SOLID NOSING - PAINTED BLACK
HW-2	DRAWER PULL - DOUG MOCKETT - DP269A - BLACK
HW-5	HD FLOATING SHELF BRACKET - AKSEL - 58"L
HW-12	DOOR LOCK - RICHELIEU LOC807342014A

PL-2 CABINET CONSTRUCTION SHEDULE		
PART	TYPE	DESCRIPTION
CABINET DOOR	PARTICLE CORE	PLAM-2
CABINET BOX	PARTICLE CORE	3/4" BLACK MELAMINE
CABINET BACK	PARTICLE CORE	1/2" BLACK MELAMINE
DRAWER BOX	PARTICLE CORE	5/8" BLACK MELAMINE
DRAWER BOTTOM	PARTICLE CORE	1/2" BLACK MELAMINE
CABINET HINGE	BLUM 110° 71B3590	FULL OVERLAY
DRAWER SLIDE	BLUM TANDEM 563H	UNDERMOUNT
EXPOSED EDGEBANDING	.5MM	PLAM-2
SEMI EXPOSED EDGEBANDING	.5MM	BLACK PVC
ALL CABINET JOINTS GLUED AND DOWLED		

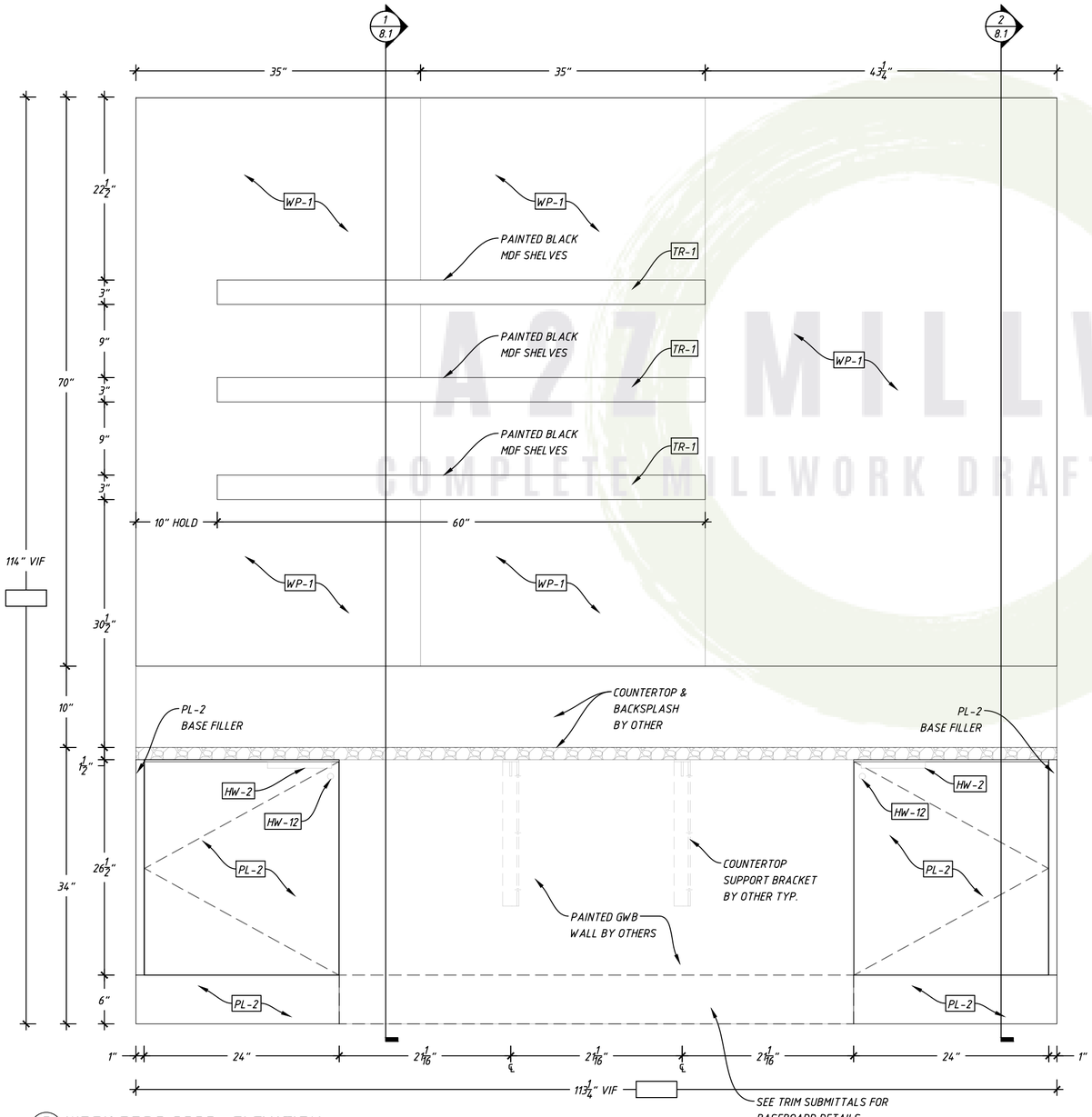

2 WORK PODS 232S - ELEVATION
8.0 SCALE: 1" = 1'-0"

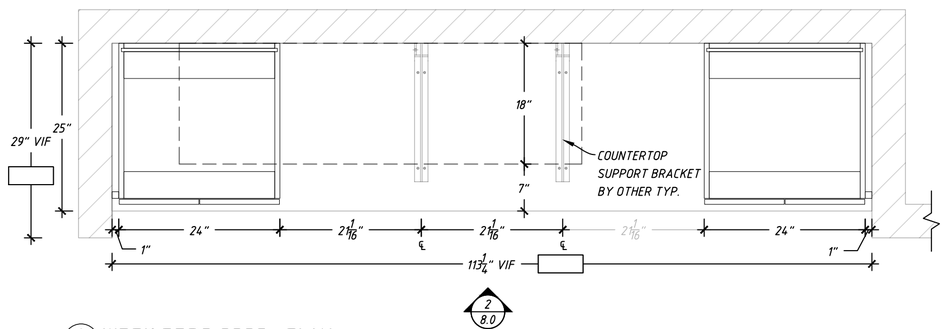

1 WORK PODS 232S - PLAN
8.0 SCALE: 3/4" = 1'-0"

A2Z MILLWORK
COMPLETE MILLWORK DRAFTING SERVICES

MANUFACTURER: A2Z MILLWORK LLC

PROJECT:

REVISIONS

JOB #: 190412

DATE: 10/5/2020

DRAWN BY: A2Z

SHEET: WORK PODS 232S

SHEET: 8.0

COPYRIGHT © A2Z MILLWORK LLC 2019

PL-2 CABINET CONSTRUCTION SHEDULE		
PART	TYPE	DESCRIPTION
CABINET DOOR	PARTICLE CORE	PLAM-2
CABINET BOX	PARTICLE CORE	3/4" BLACK MELAMINE
CABINET BACK	PARTICLE CORE	1/2" BLACK MELAMINE
DRAWER BOX	PARTICLE CORE	5/8" BLACK MELAMINE
DRAWER BOTTOM	PARTICLE CORE	1/2" BLACK MELAMINE
CABINET HINGE	BLUM 110° 71B3590	FULL OVERLAY
DRAWER SLIDE	BLUM TANDEM 563H	UNDERMOUNT
EXPOSED EDGEBANDING	.5MM	PLAM-2
SEMI EXPOSED EDGEBANDING	.5MM	BLACK PVC
ALL CABINET JOINTS GLUED AND DOWLED		

MASTER MATERIAL SCHEDULE	
TAG	NOTES:
WP-1	1/4" CORK BOARD
PL-2	LAMINART - SMOKED CHARCOAL BURLAP
TR-1	3/4"X3" SOLID NOSING - PAINTED BLACK
HW-2	DRAWER PULL - DOUG MOCKETT - DP269A - BLACK
HW-5	HD FLOATING SHELF BRACKET - AKSEL - 58"L
HW-12	DOOR LOCK - RICHELIEU LOC807342014A

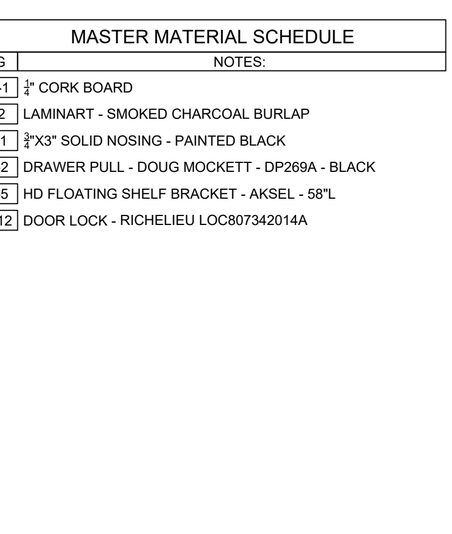

3 / 8.1 DETAIL
SCALE: 6" = 1'-0"

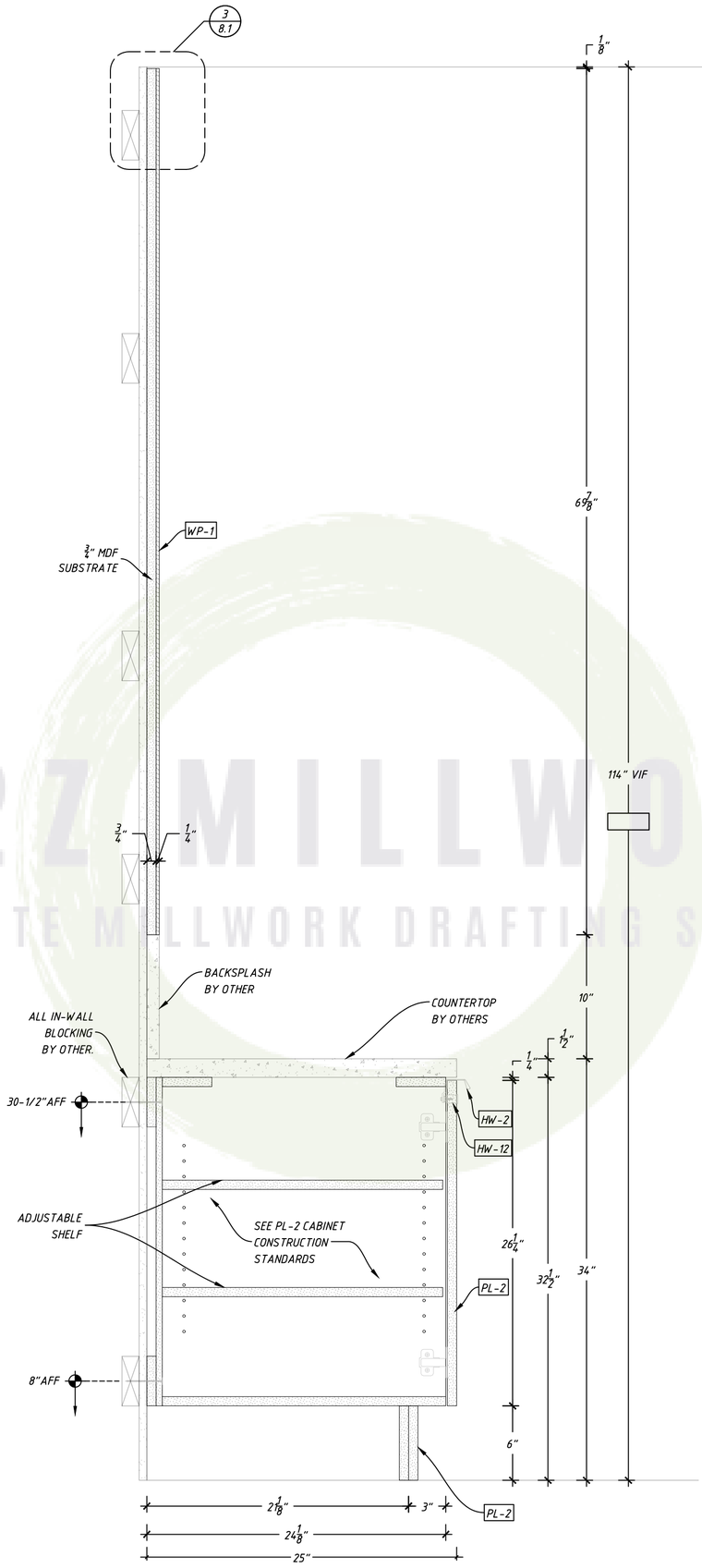

2 / 8.1 SECTION
SCALE: 1 1/2" = 1'-0"

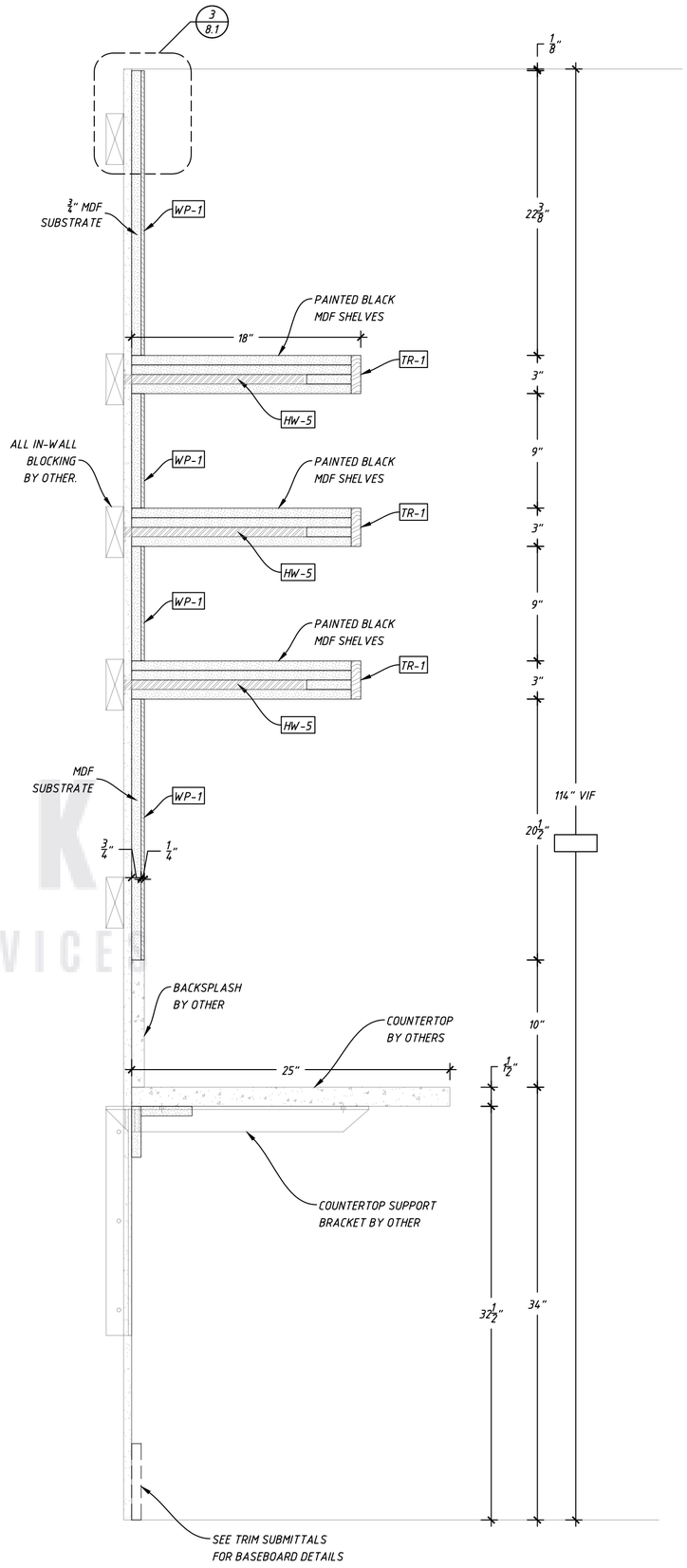

1 / 8.1 SECTION
SCALE: 1 1/2" = 1'-0"

A2Z MILLWORK
COMPLETE MILLWORK DRAFTING SERVICES

MANUFACTURER: A2Z MILLWORK LLC

PROJECT:

REVISIONS

JOB #: 190412
DATE: 10/5/2020
DRAWN BY: A2Z

SHEET: WORK PODS 232S

SHEET: 8.1

COPYRIGHT © A2Z MILLWORK LLC 2019

PL-2 CABINET CONSTRUCTION SHEDULE		
PART	TYPE	DESCRIPTION
CABINET DOOR	PARTICLE CORE	PLAM-2
CABINET BOX	PARTICLE CORE	3/4" BLACK MELAMINE
CABINET BACK	PARTICLE CORE	1/2" BLACK MELAMINE
DRAWER BOX	PARTICLE CORE	5/8" BLACK MELAMINE
DRAWER BOTTOM	PARTICLE CORE	1/2" BLACK MELAMINE
CABINET HINGE	BLUM 110° 71B3590	FULL OVERLAY
DRAWER SLIDE	BLUM TANDEM 563H	UNDERMOUNT
EXPOSED EDGEBANDING	.5MM	PLAM-2
SEMI EXPOSED EDGEBANDING	.5MM	BLACK PVC
ALL CABINET JOINTS GLUED AND DOWLED		

MASTER MATERIAL SCHEDULE	
TAG	NOTES:
WP-1	$\frac{1}{4}$" CORK BOARD
PL-2	LAMINART - SMOKED CHARCOAL BURLAP
TR-1	$\frac{3}{4}$"X3" SOLID NOSING - PAINTED BLACK
HW-2	DRAWER PULL - DOUG MOCKETT - DP269A - BLACK
HW-5	HD FLOATING SHELF BRACKET - AKSEL - 58"L
HW-12	DOOR LOCK - RICHELIEU LOC807342014A

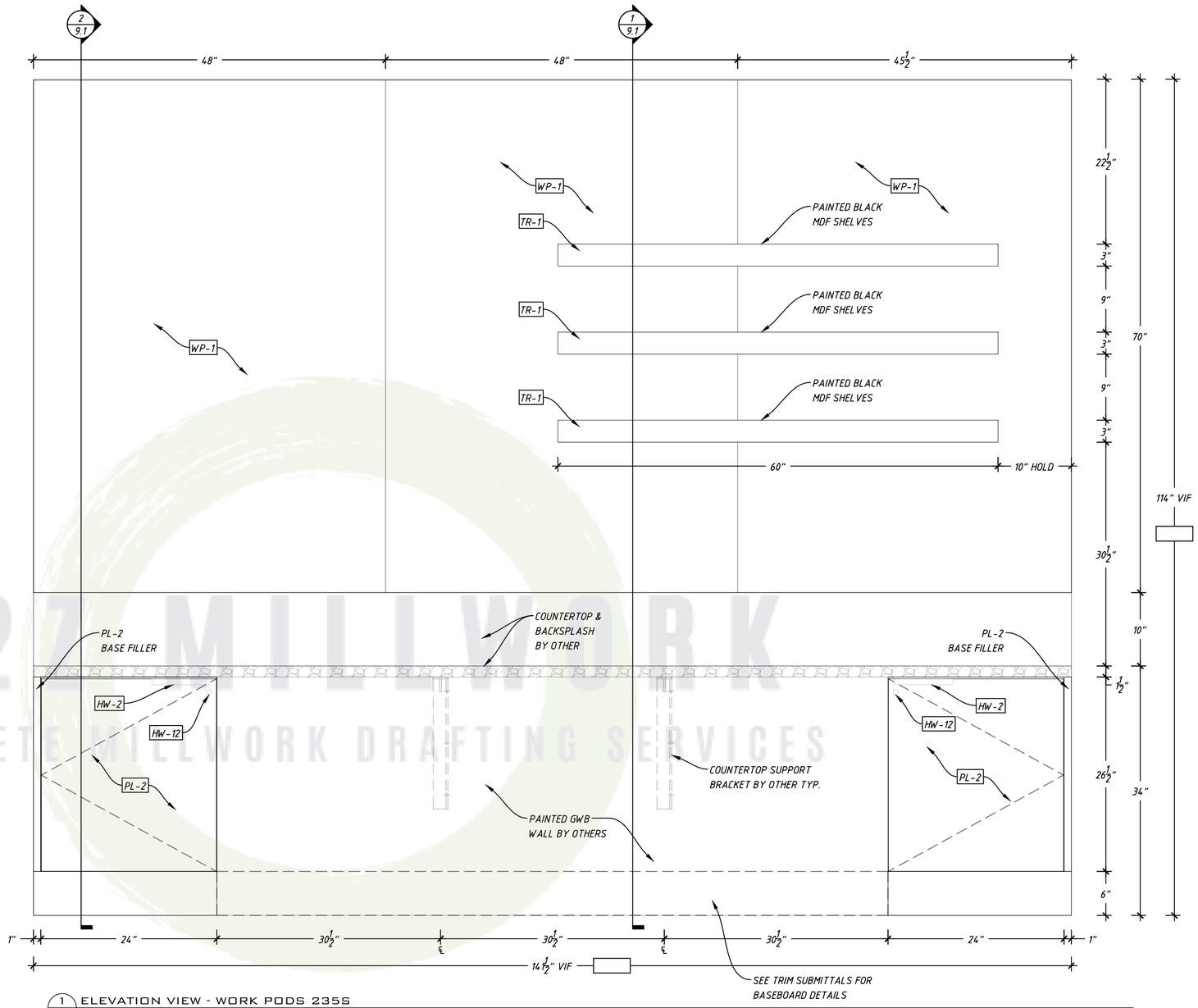

1 9.0 ELEVATION VIEW - WORK PODS 235S
SCALE: 1" = 1'-0"

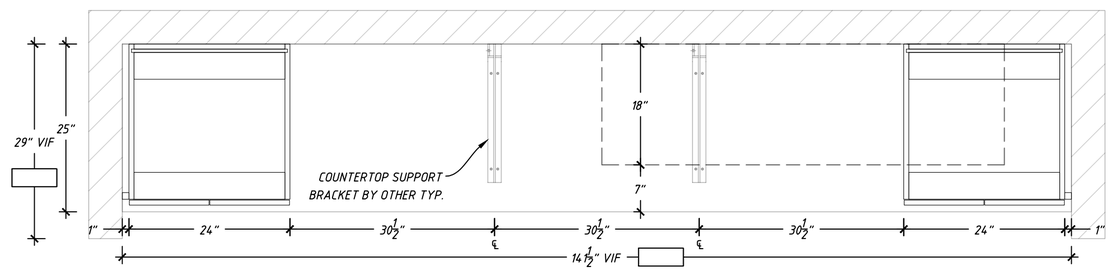

1 9.0 PLAN VIEW-WORK PODS 235S
SCALE: 3/4" = 1'-0"

A2Z MILLWORK
COMPLETE MILLWORK DRAFTING SERVICES

MANUFACTURER: A2Z MILLWORK LLC

PROJECT:

REVISIONS

JOB #: 190412
DATE: 10/5/2020
DRAWN BY: A2Z

SHEET: WORK PODS 235S

SHEET: 9.0

COPYRIGHT © A2Z MILLWORK LLC 2019

PL-2 CABINET CONSTRUCTION SHEDULE		
PART	TYPE	DESCRIPTION
CABINET DOOR	PARTICLE CORE	PLAM-2
CABINET BOX	PARTICLE CORE	3/4" BLACK MELAMINE
CABINET BACK	PARTICLE CORE	1/2" BLACK MELAMINE
DRAWER BOX	PARTICLE CORE	5/8" BLACK MELAMINE
DRAWER BOTTOM	PARTICLE CORE	1/2" BLACK MELAMINE
CABINET HINGE	BLUM 110° 71B3590	FULL OVERLAY
DRAWER SLIDE	BLUM TANDEM 563H	UNDERMOUNT
EXPOSED EDGEBANDING	.5MM	PLAM-2
SEMI EXPOSED EDGEBANDING	.5MM	BLACK PVC
ALL CABINET JOINTS GLUED AND DOWLED		

MASTER MATERIAL SCHEDULE	
TAG	NOTES:
WP-1	1/4" CORK BOARD
PL-2	LAMINART - SMOKED CHARCOAL BURLAP
TR-1	3/4"X3" SOLID NOSING - PAINTED BLACK
HW-2	DRAWER PULL - DOUG MOCKETT - DP269A - BLACK
HW-5	HD FLOATING SHELF BRACKET - AKSEL - 58"L
HW-12	DOOR LOCK - RICHELIEU LOC807342014A

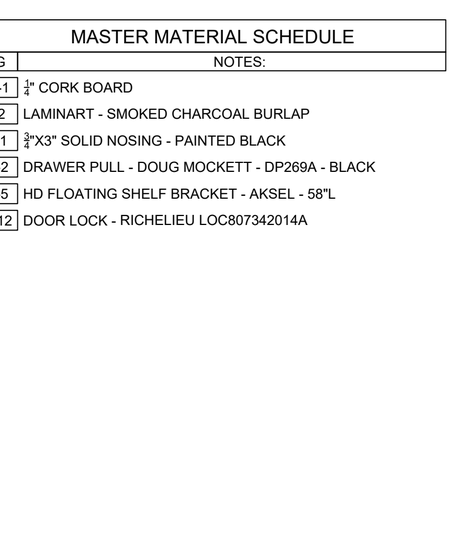

3 / 9.1 DETAIL
SCALE: 6" = 1'-0"

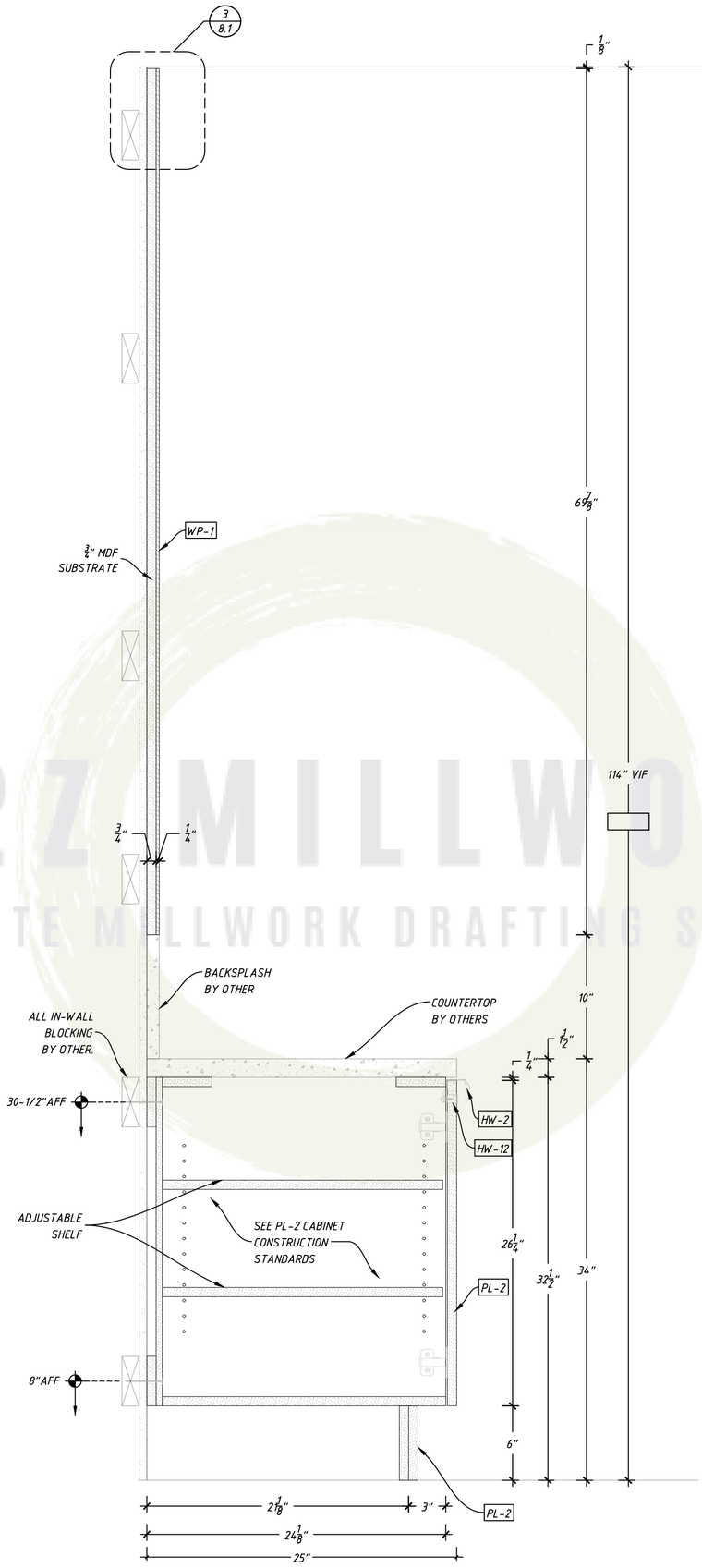

2 / 9.1 SECTION
SCALE: 1 1/2" = 1'-0"

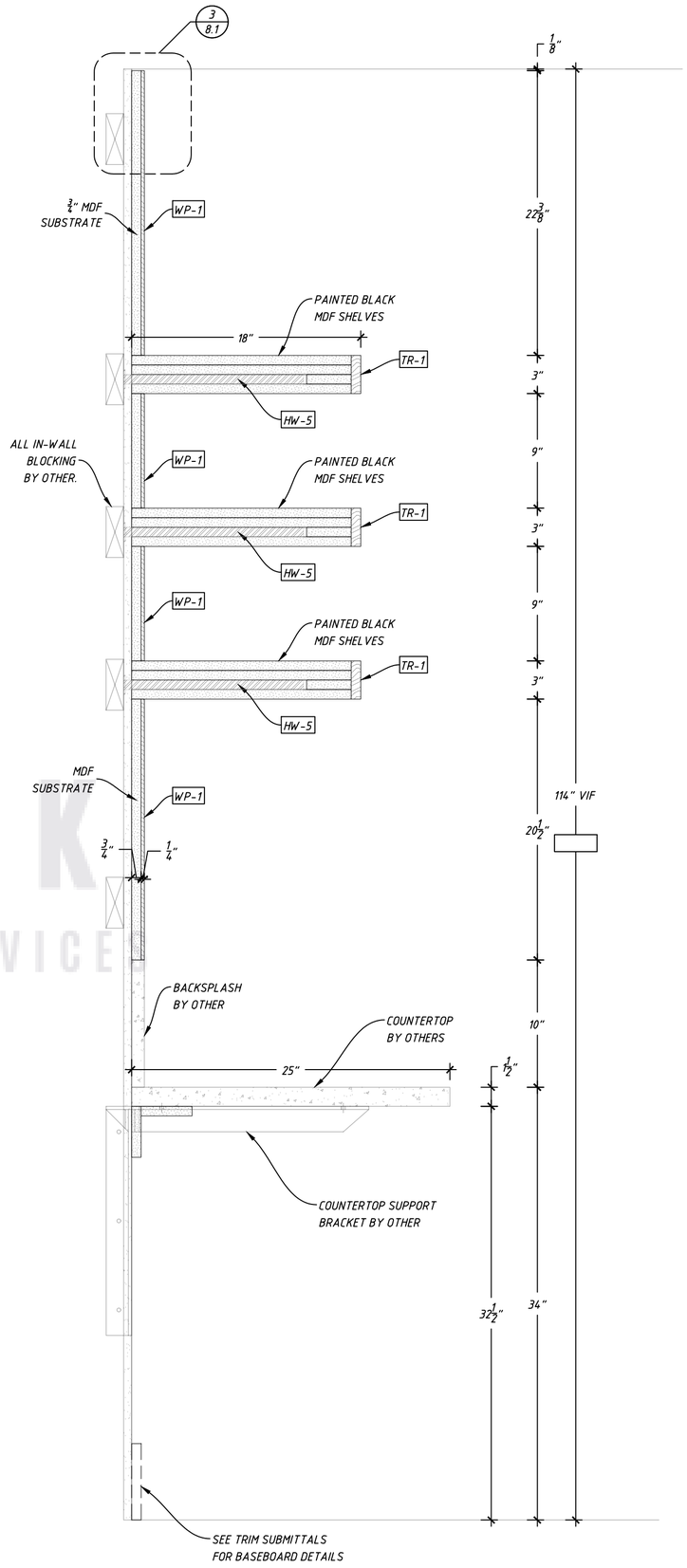

1 / 9.1 SECTION
SCALE: 1 1/2" = 1'-0"

A2Z MILLWORK
COMPLETE MILLWORK DRAFTING SERVICES

MANUFACTURER:
A2Z MILLWORK LLC

PROJECT:

REVISIONS

JOB #: 190412
DATE: 10/5/2020
DRAWN BY: A2Z

SHEET:
WORK PODS
235S

SHEET:
9.1

COPYRIGHT © A2Z MILLWORK LLC 2019

MASTER MATERIAL SCHEDULE	
TAG	NOTES:
PL-2	LAMINART - SMOKED CHARCOAL BURLAP
HW-2	DRAWER PULL - DOUG MOCKETT - DP269A - BLACK
HW-6	TRASH PULLOUT - REVASHELF - RV15PB2S

PL-2 CABINET CONSTRUCTION SHEDULE		
PART	TYPE	DESCRIPTION
CABINET DOOR	PARTICLE CORE	PLAM-2
CABINET BOX	PARTICLE CORE	3/4" BLACK MELAMINE
CABINET BACK	PARTICLE CORE	1/2" BLACK MELAMINE
DRAWER BOX	PARTICLE CORE	5/8" BLACK MELAMINE
DRAWER BOTTOM	PARTICLE CORE	1/2" BLACK MELAMINE
CABINET HINGE	BLUM 110° 71B3590	FULL OVERLAY
DRAWER SLIDE	BLUM TANDEM 563H	UNDERMOUNT
EXPOSED EDGEBANDING	.5MM	PLAM-2
SEMI EXPOSED EDGEBANDING	.5MM	BLACK PVC
ALL CABINET JOINTS GLUED AND DOWLED		

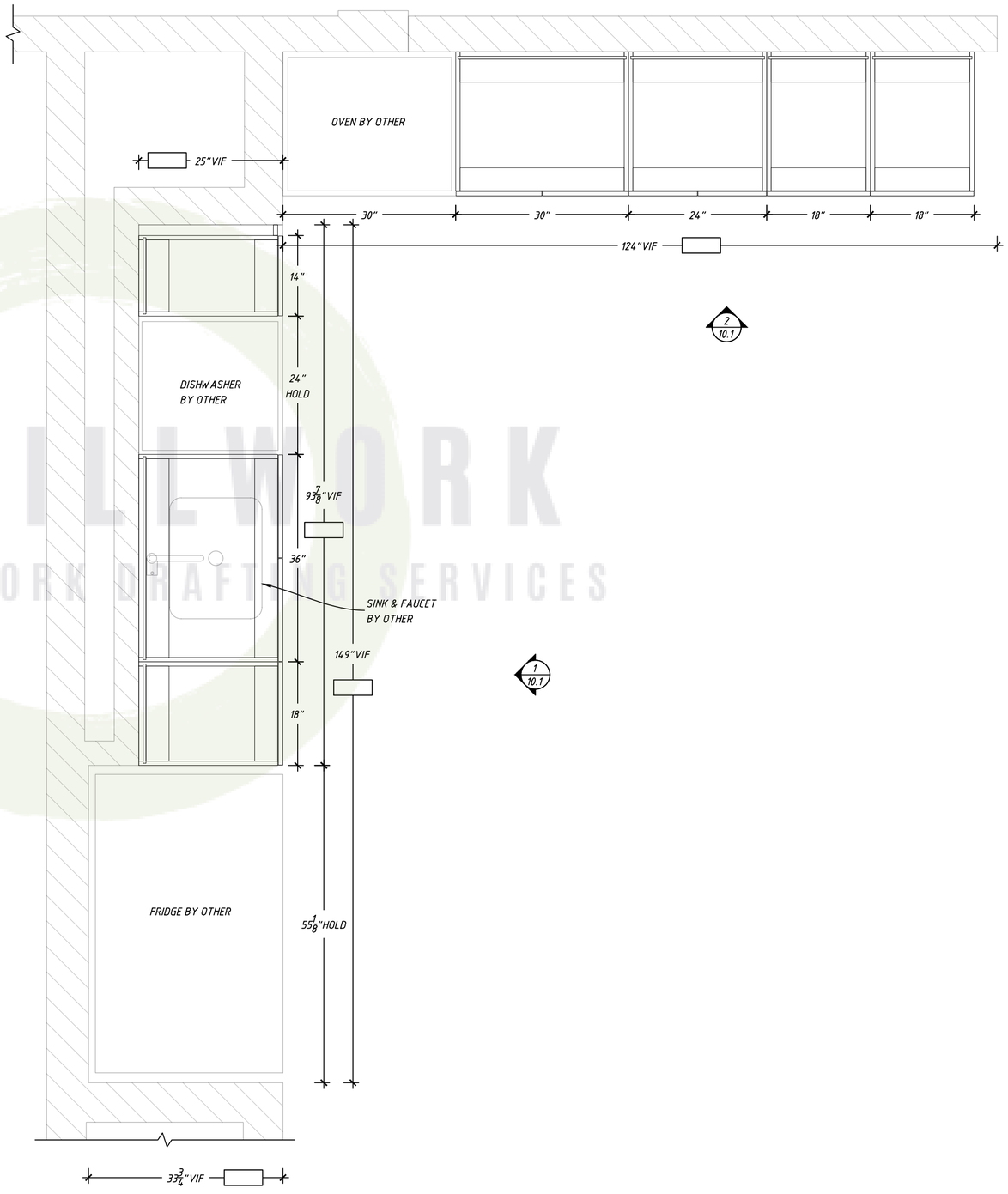

1 / 10.0 KITCHEN 236S (MAKER SPACE KITCHEN) - PLAN
SCALE: 3/4" = 1'-0"

A2Z MILLWORK
COMPLETE MILLWORK DRAFTING SERVICES

MANUFACTURER: A2Z MILLWORK LLC

PROJECT:

REVISIONS

JOB #: 190412
DATE: 10/5/2020
DRAWN BY: A2Z

SHEET: KITCHEN 236S (MAKER SPACE KITCHEN)

SHEET: 10.0

COPYRIGHT © A2Z MILLWORK LLC 2019

PL-2 CABINET CONSTRUCTION SHEDULE		
PART	TYPE	DESCRIPTION
CABINET DOOR	PARTICLE CORE	PLAM-2
CABINET BOX	PARTICLE CORE	3/4" BLACK MELAMINE
CABINET BACK	PARTICLE CORE	1/2" BLACK MELAMINE
DRAWER BOX	PARTICLE CORE	5/8" BLACK MELAMINE
DRAWER BOTTOM	PARTICLE CORE	1/2" BLACK MELAMINE
CABINET HINGE	BLUM 110° 71B3590	FULL OVERLAY
DRAWER SLIDE	BLUM TANDEM 563H	UNDERMOUNT
EXPOSED EDGEBANDING	.5MM	PLAM-2
SEMI EXPOSED EDGEBANDING	.5MM	BLACK PVC
ALL CABINET JOINTS GLUED AND DOWLED		

MASTER MATERIAL SCHEDULE	
TAG	NOTES:
PL-2	LAMINART - SMOKED CHARCOAL BURLAP
HW-2	DRAWER PULL - DOUG MOCKETT - DP269A - BLACK
HW-6	TRASH PULLOUT - REVASHELF - RV15PB2S

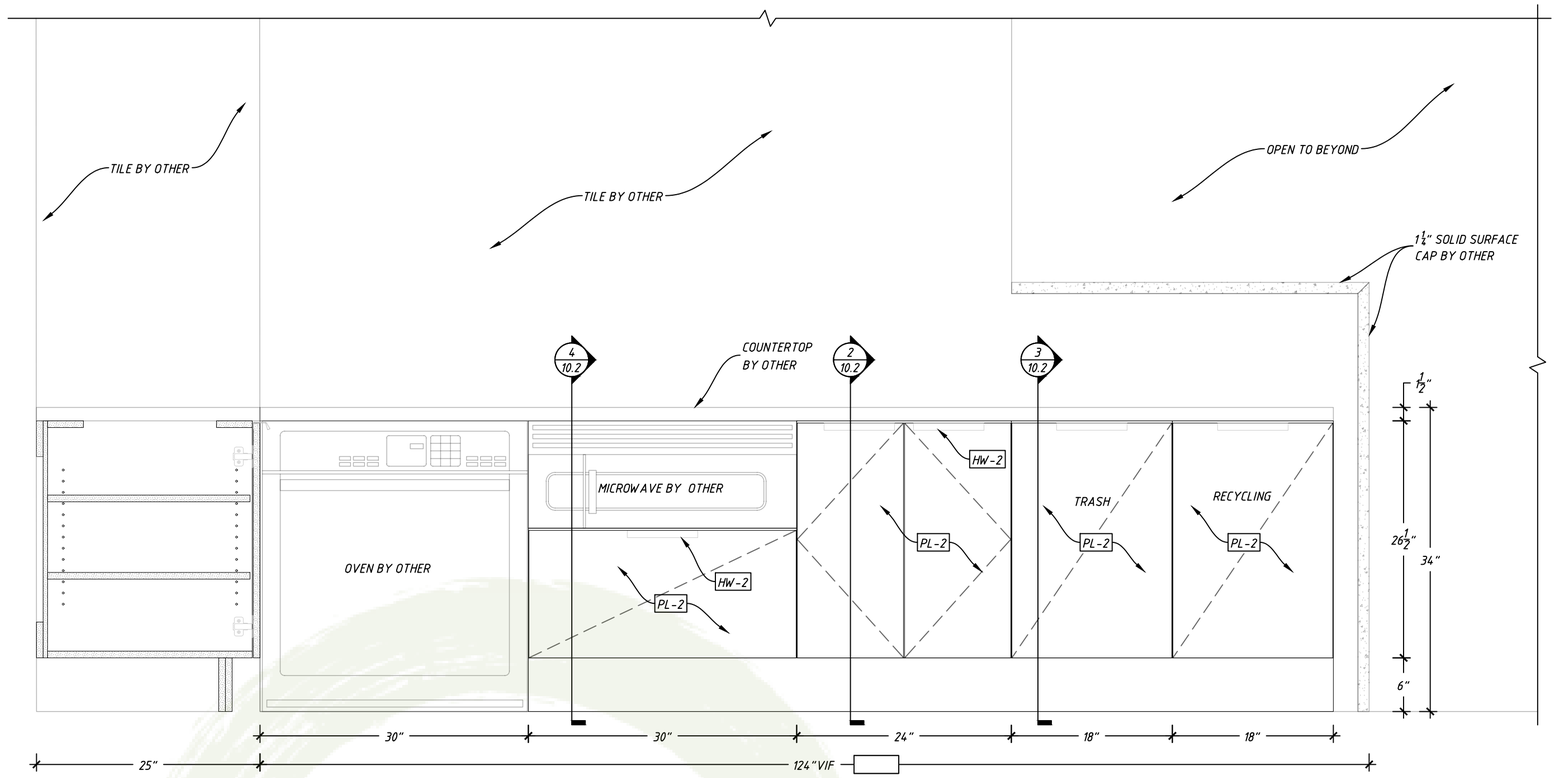

2 / 10.1 KITCHEN 236S (MAKER SPACE KITCHEN) - ELEVATION
SCALE: 1" = 1'-0"

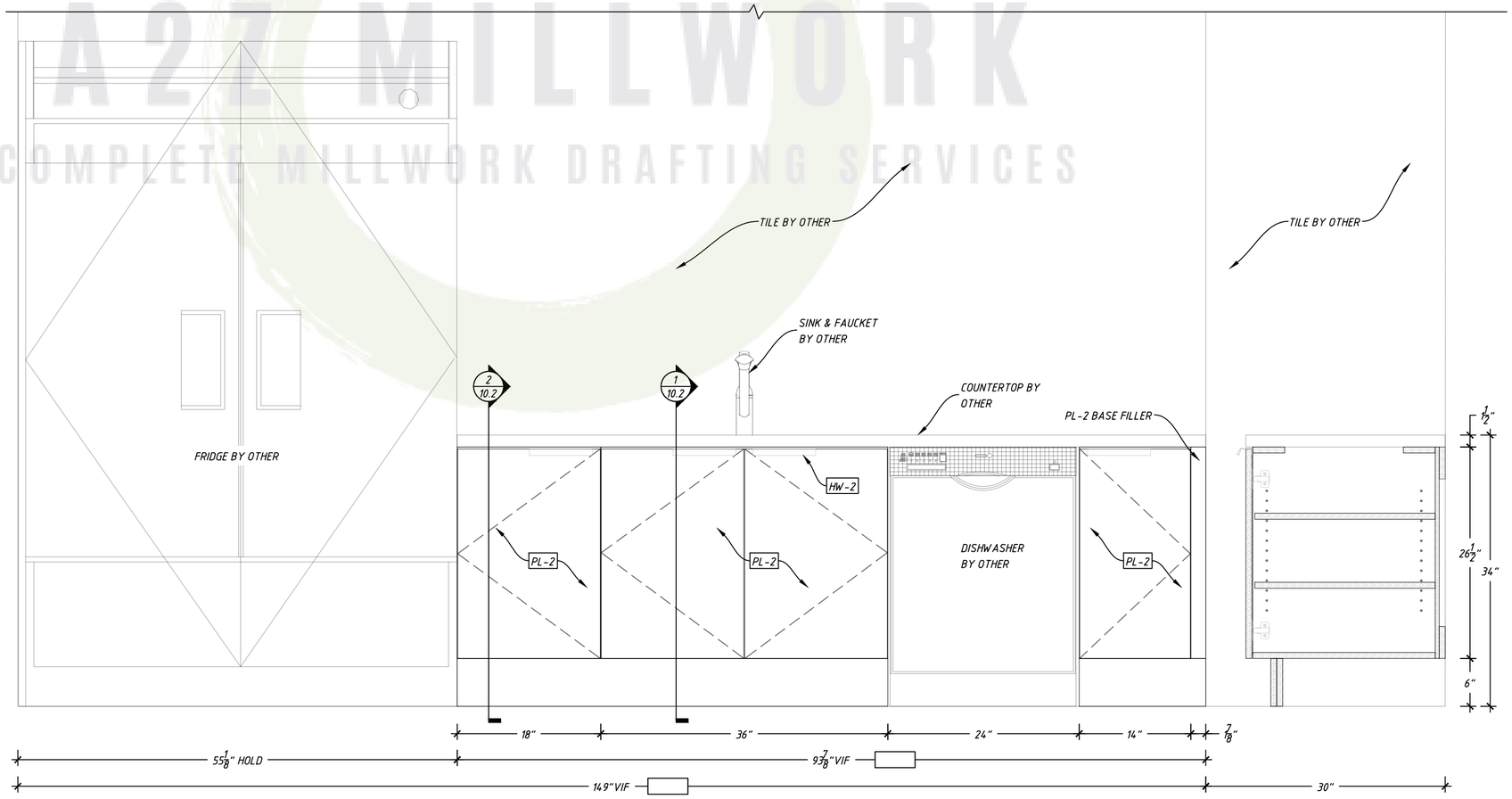

1 / 10.1 KITCHEN 236S (MAKER SPACE KITCHEN) - ELEVATION
SCALE: 1" = 1'-0"

A2Z MILLWORK
COMPLETE MILLWORK DRAFTING SERVICES

MANUFACTURER: A2Z MILLWORK LLC

PROJECT:

REVISIONS

JOB #: 190412
DATE: 10/5/2020
DRAWN BY: A2Z

SHEET: KITCHEN 236S (MAKER SPACE KITCHEN)

SHEET: 10.1

COPYRIGHT © A2Z MILLWORK LLC 2019

MASTER MATERIAL SCHEDULE	
TAG	NOTES:
PL-2	LAMINART - SMOKED CHARCOAL BURLAP
HW-2	DRAWER PULL - DOUG MOCKETT - DP269A - BLACK
HW-6	TRASH PULLOUT - REVASHELF - RV15PB2S

PL-2 CABINET CONSTRUCTION SHEDULE		
PART	TYPE	DESCRIPTION
CABINET DOOR	PARTICLE CORE	PLAM-2
CABINET BOX	PARTICLE CORE	3/4" BLACK MELAMINE
CABINET BACK	PARTICLE CORE	1/2" BLACK MELAMINE
DRAWER BOX	PARTICLE CORE	5/8" BLACK MELAMINE
DRAWER BOTTOM	PARTICLE CORE	1/2" BLACK MELAMINE
CABINET HINGE	BLUM 110° 71B3590	FULL OVERLAY
DRAWER SLIDE	BLUM TANDEM 563H	UNDERMOUNT
EXPOSED EDGEBANDING	.5MM	PLAM-2
SEMI EXPOSED EDGEBANDING	.5MM	BLACK PVC
ALL CABINET JOINTS GLUED AND DOWLED		

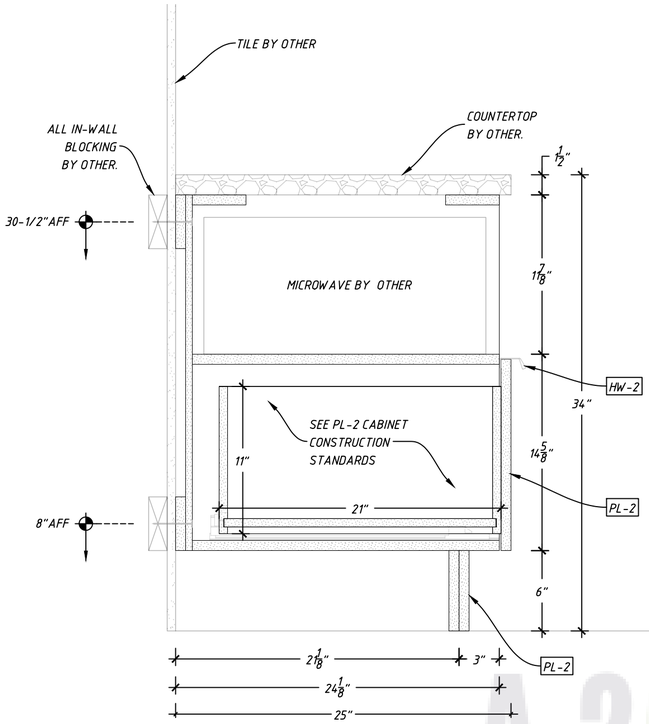

4 SECTION 10.2 SCALE: 1 1/2" = 1'-0"

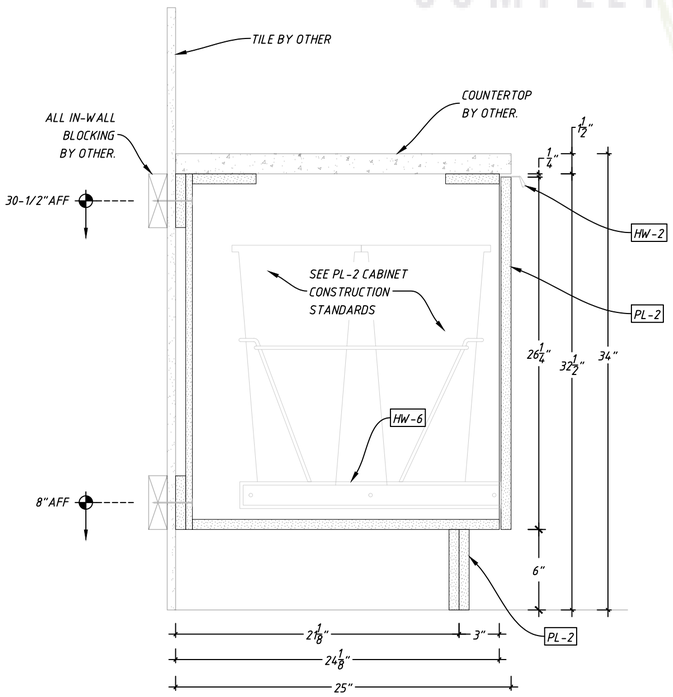

3 SECTION 10.2 SCALE: 1 1/2" = 1'-0"

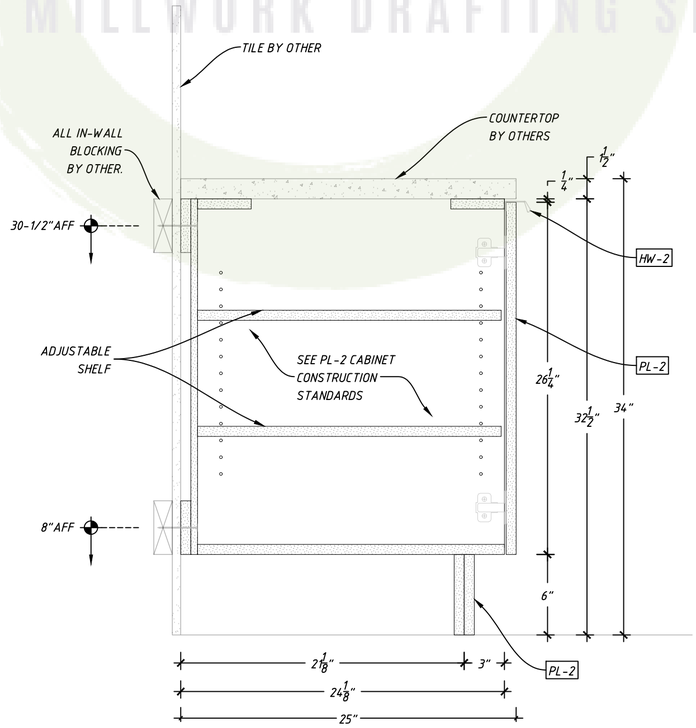

2 SECTION 10.2 SCALE: 1 1/2" = 1'-0"

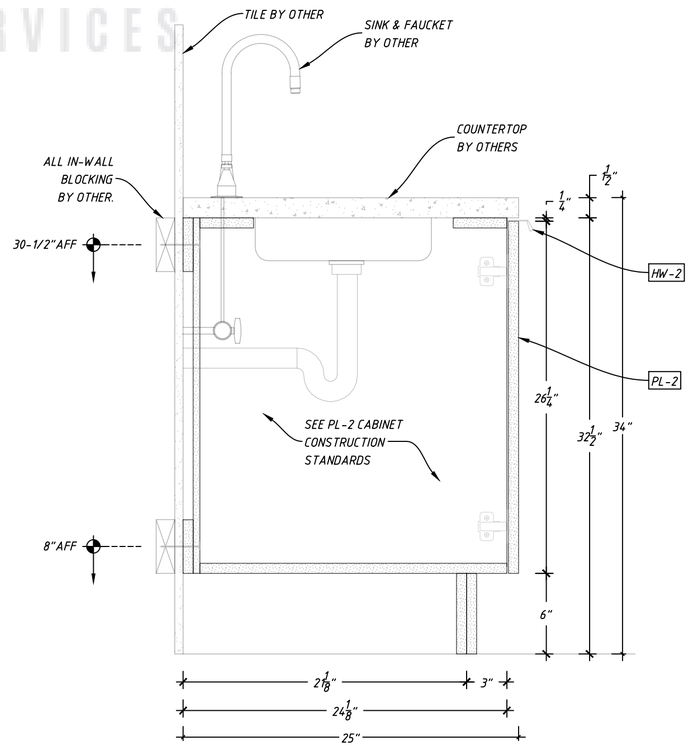

1 SECTION 10.2 SCALE: 1 1/2" = 1'-0"

A2Z MILLWORK
COMPLETE MILLWORK DRAFTING SERVICES

A2Z MILLWORK

MANUFACTURER: A2Z MILLWORK LLC

PROJECT:

REVISIONS

JOB #: 190412

DATE: 10/5/2020

DRAWN BY: A2Z

SHEET: KITCHEN 236S (MAKER SPACE KITCHEN)

SHEET: 10.2

COPYRIGHT © A2Z MILLWORK LLC 2019

MASTER MATERIAL SCHEDULE	
TAG	NOTES:
PL-2	LAMINART - SMOKED CHARCOAL BURLAP
HW-1	DRAWER PULL - DOUG MOCKETT - DP252A - BLACK

PL-2 CABINET CONSTRUCTION SHEDULE		
PART	TYPE	DESCRIPTION
CABINET DOOR	PARTICLE CORE	PLAM-2
CABINET BOX	PARTICLE CORE	3/4" BLACK MELAMINE
CABINET BACK	PARTICLE CORE	1/2" BLACK MELAMINE
DRAWER BOX	PARTICLE CORE	5/8" BLACK MELAMINE
DRAWER BOTTOM	PARTICLE CORE	1/2" BLACK MELAMINE
CABINET HINGE	BLUM 110° 71B3590	FULL OVERLAY
DRAWER SLIDE	BLUM TANDEM 563H	UNDERMOUNT
EXPOSED EDGEBANDING	.5MM	PLAM-2
SEMI EXPOSED EDGEBANDING	.5MM	BLACK PVC
ALL CABINET JOINTS GLUED AND DOWLED		

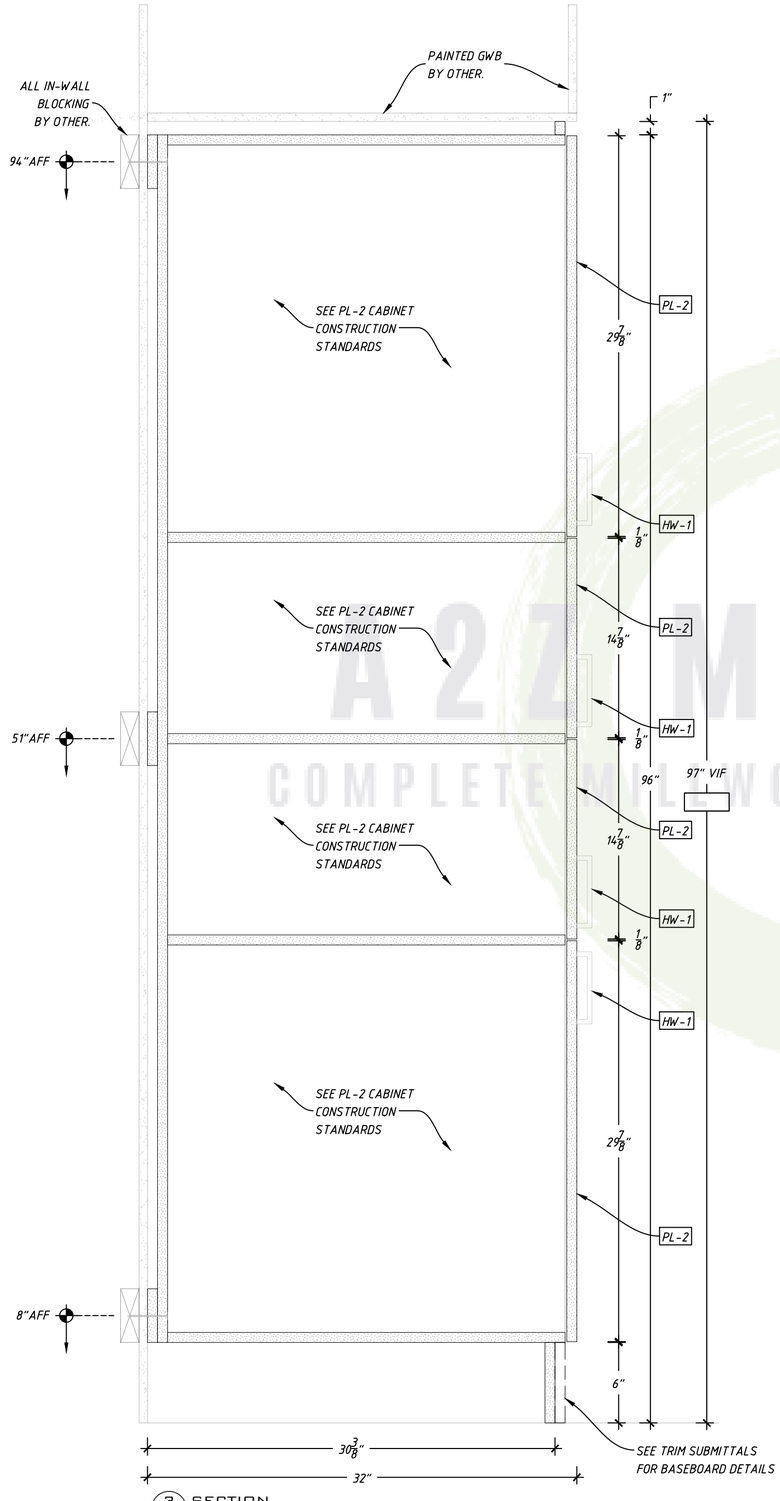

3 / 11.0 SECTION
SCALE: 1-1/2"=1'-0"

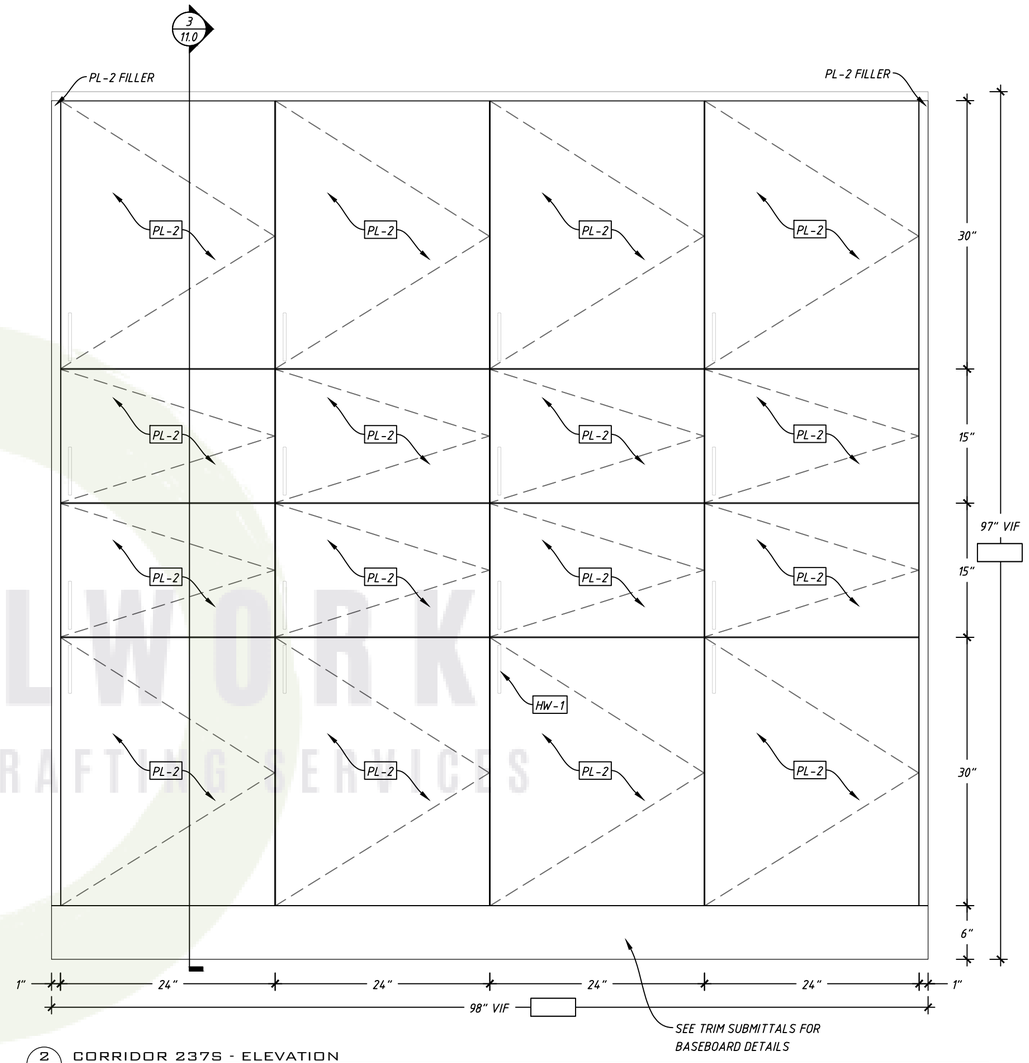

2 / 11.0 CORRIDOR 237S - ELEVATION
SCALE: 1"=1'-0"

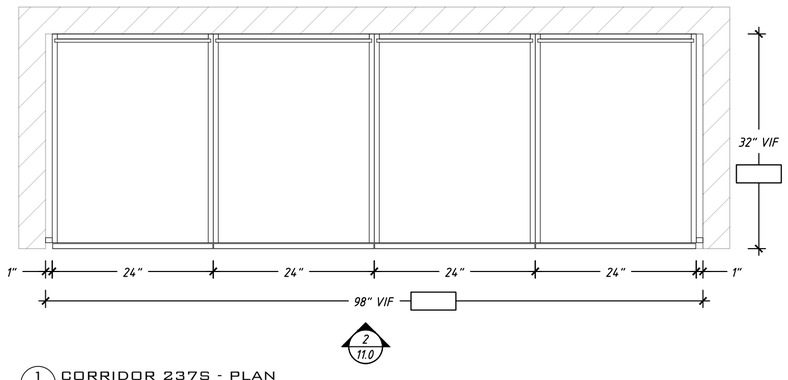

1 / 11.0 CORRIDOR 237S - PLAN
SCALE: 3/4"=1'-0"

A2Z MILLWORK
COMPLETE MILLWORK DRAFTING SERVICES

MANUFACTURER: A2Z MILLWORK LLC

PROJECT:

REVISIONS

JOB #: 190412
DATE: 10/5/2020
DRAWN BY: A2Z

SHEET: CORRIDOR 237S

SHEET: 11.0

COPYRIGHT © A2Z MILLWORK LLC 2019

MASTER MATERIAL SCHEDULE	
TAG	NOTES:
WD-1	$\frac{3}{4}$" SANDED/SATIN FINISHED OSB APPLIED PANEL
HW-11	Z CLIP - STAR HANGER - 400 NZ - $\frac{1}{4}$" NYLON PANEL CLIP
HW-13	CEILING CLIP - STAR HANGER - 510 CEILING CLIP

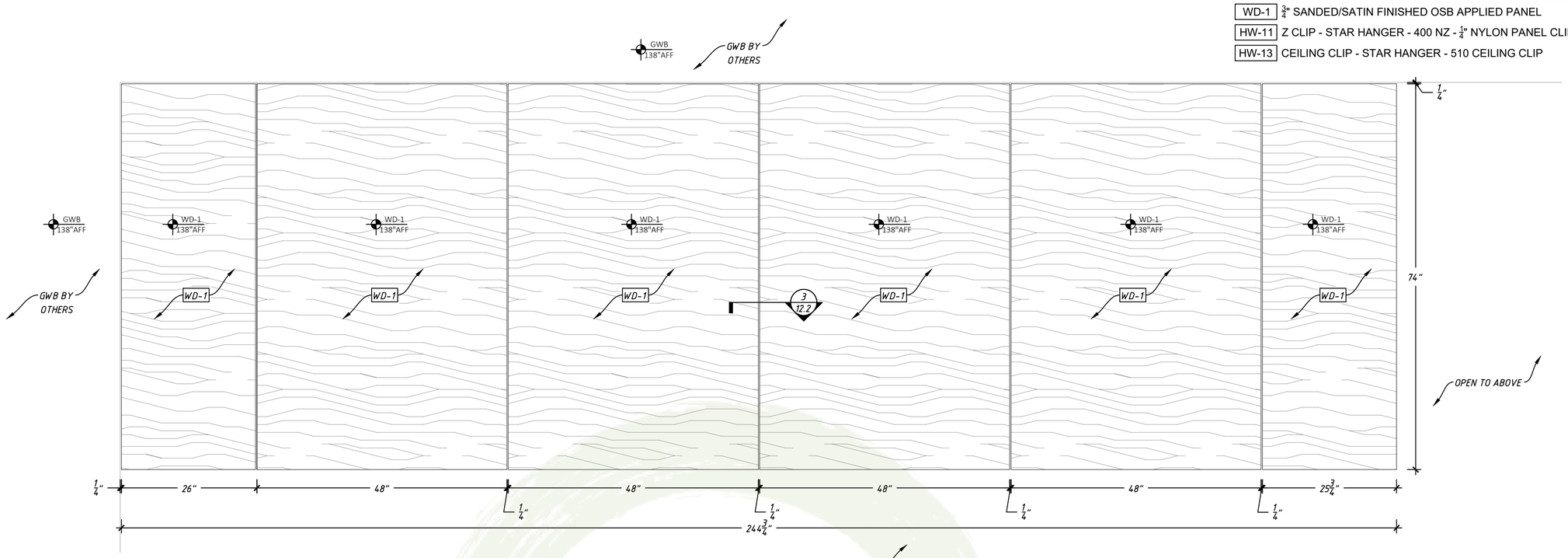

2 / 12.0 COMMUNITY ROOM 240S - RCP
SCALE: 3/4" = 1'-0"

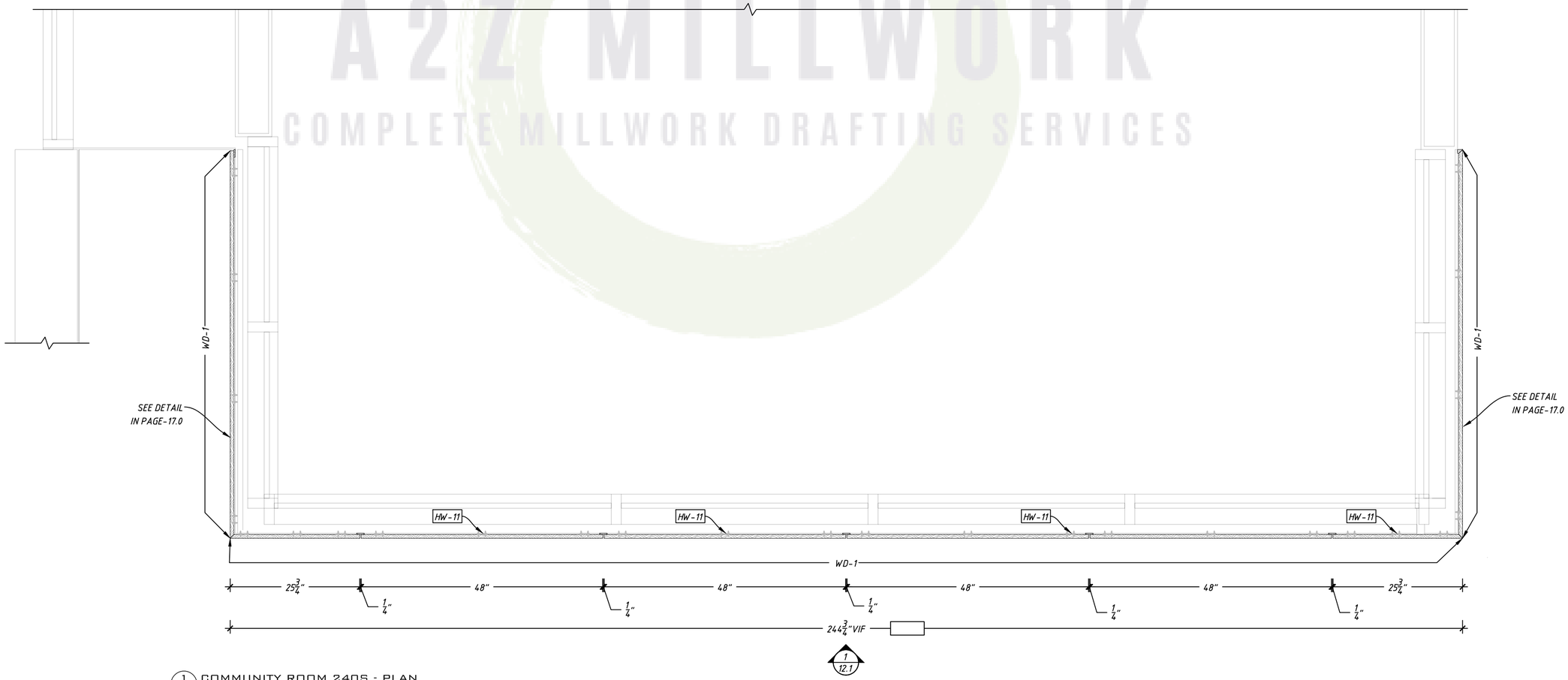

1 / 12.0 COMMUNITY ROOM 240S - PLAN
SCALE: 3/4" = 1'-0"

A2Z MILLWORK
COMPLETE MILLWORK DRAFTING SERVICES

MANUFACTURER: A2Z MILLWORK LLC

PROJECT:

REVISIONS

JOB #: 190412
DATE: 10/5/2020
DRAWN BY: A2Z

SHEET: COMMUNITY ROOM 240S

SHEET: 12.0

COPYRIGHT © A2Z MILLWORK LLC 2019

MASTER MATERIAL SCHEDULE	
TAG	NOTES:
WD-1	$\frac{3}{4}$" SANDED/SATIN FINISHED OSB APPLIED PANEL
HW-11	Z CLIP - STAR HANGER - 400 NZ - $\frac{1}{4}$" NYLON PANEL CLIP
HW-13	CEILING CLIP - STAR HANGER - 510 CEILING CLIP

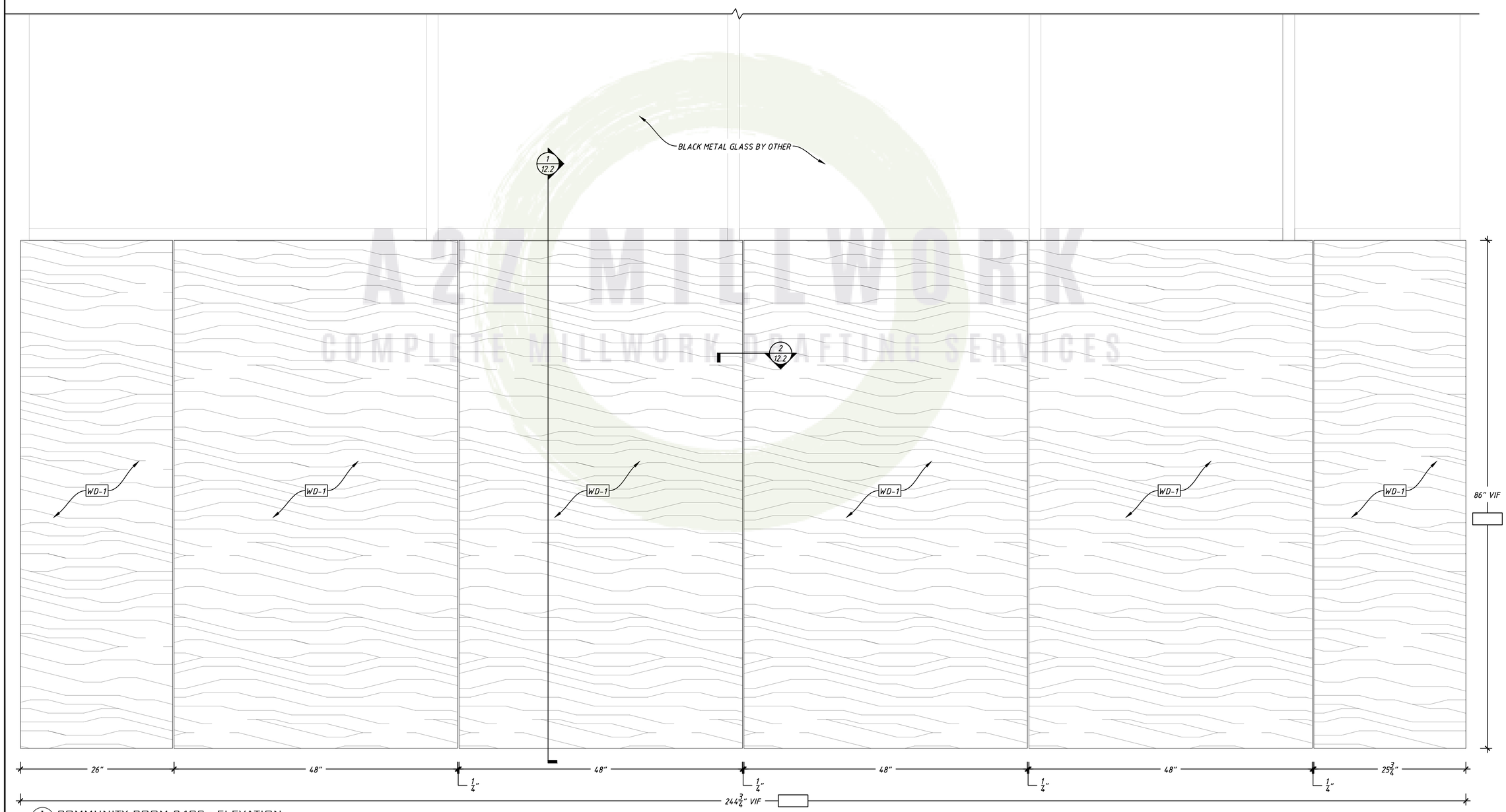

1 / 12.1 COMMUNITY ROOM 240S - ELEVATION
SCALE: 1" = 1'-0"

A2Z MILLWORK
COMPLETE MILLWORK DRAFTING SERVICES

MANUFACTURER:
A2Z MILLWORK LLC

PROJECT:

REVISIONS

JOB #: 190412
DATE: 10/5/2020
DRAWN BY: A2Z

SHEET:
COMMUNITY ROOM 240S

SHEET:
12.1

COPYRIGHT © A2Z MILLWORK LLC 2019

MASTER MATERIAL SCHEDULE	
TAG	NOTES:
WD-1	$\frac{3}{4}$" SANDED/SATIN FINISHED OSB APPLIED PANEL
HW-11	Z CLIP - STAR HANGER - 400 NZ - $\frac{1}{4}$" NYLON PANEL CLIP
HW-13	CEILING CLIP - STAR HANGER - 510 CEILING CLIP

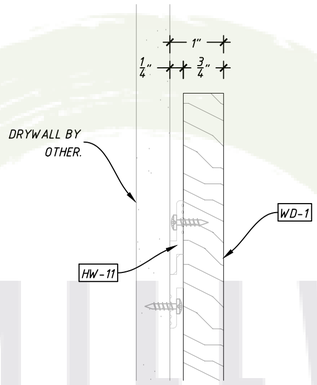

4 12.2 DETAIL
SCALE: 6"=1'-0"

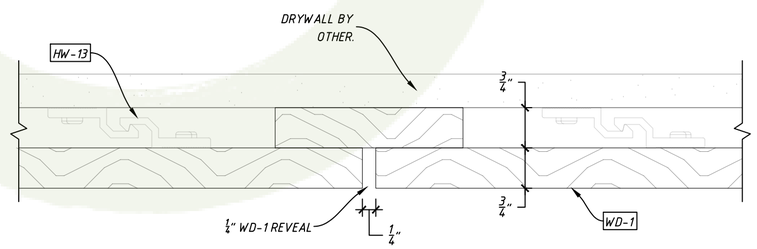

3 12.2 DETAIL
SCALE: 6"=1'-0"

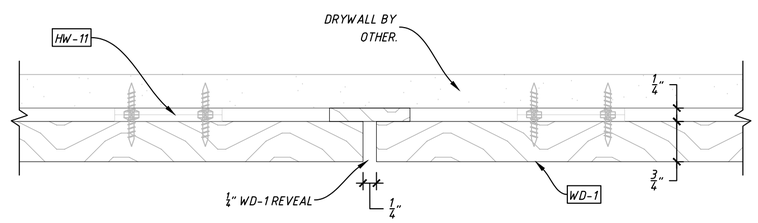

2 12.2 SECTION
SCALE: 6"=1'-0"

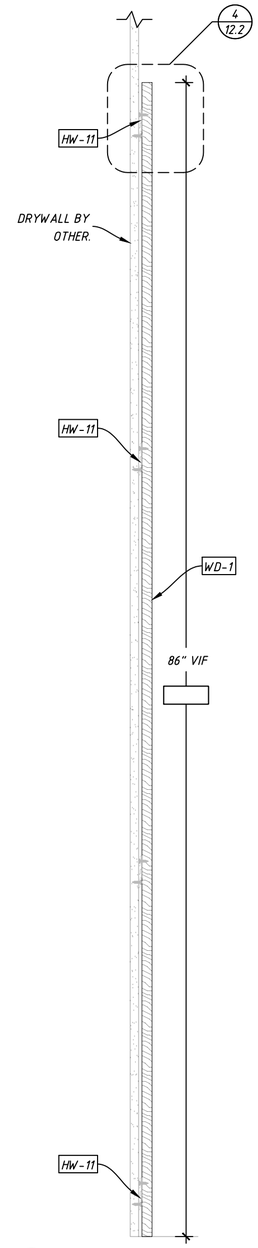

1 12.2 SECTION
SCALE: 1-1/2"=1'-0"

A2Z MILLWORK
COMPLETE MILLWORK DRAFTING SERVICES

MANUFACTURER:
A2Z MILLWORK LLC

PROJECT:

REVISIONS

JOB #:	190412
DATE:	10/5/2020
DRAWN BY:	A2Z

SHEET:
COMMUNITY ROOM 240S

SHEET:
12.2

COPYRIGHT © A2Z MILLWORK LLC 2019

PL-4 CABINET CONSTRUCTION SHEDULE		
PART	TYPE	DESCRIPTION
CABINET DOOR	PARTICLE CORE	PLAM-4
CABINET BOX	PARTICLE CORE	3/4" BLACK MELAMINE
CABINET BACK	PARTICLE CORE	1/2" BLACK MELAMINE
DRAWER BOX	PARTICLE CORE	5/8" BLACK MELAMINE
DRAWER BOTTOM	PARTICLE CORE	1/2" BLACK MELAMINE
CABINET HINGE	BLUM 110° 71B3590	FULL OVERLAY
DRAWER SLIDE	BLUM TANDEM 563H	UNDERMOUNT
EXPOSED EDGEBANDING	.5MM	PLAM-4
SEMI EXPOSED EDGEBANDING	.5MM	BLACK PVC
ALL CABINET JOINTS GLUED AND DOWLED		

MASTER MATERIAL SCHEDULE	
TAG	NOTES:
PL-4	WILSONART - LOFT DOOR - FINE VELVET - 48" X 120"
HW-2	DRAWER PULL - DOUG MOCKETT - DP269A - BLACK
HW-6	TRASH PULLOUT - REVASHELF - RV15PB2S
HW-11	Z CLIP - STAR HANGER - 400 NZ - 1/4" NYLON PANEL CLIP

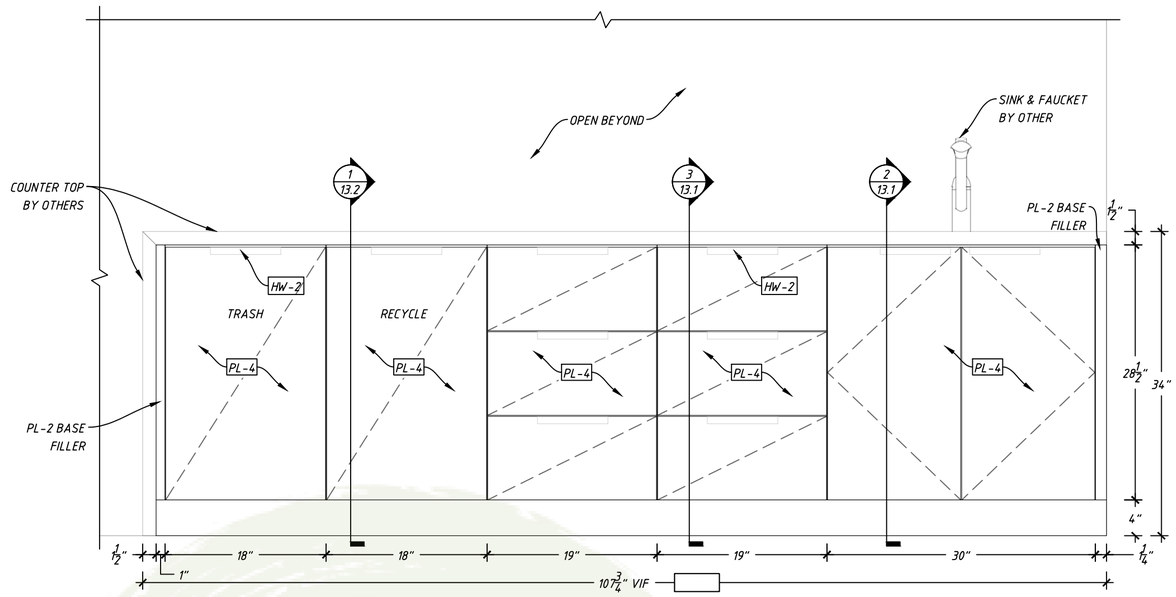

2 / 13.0 COFFEE BAR 241S - ELEVATION
SCALE: 1"=1'-0"

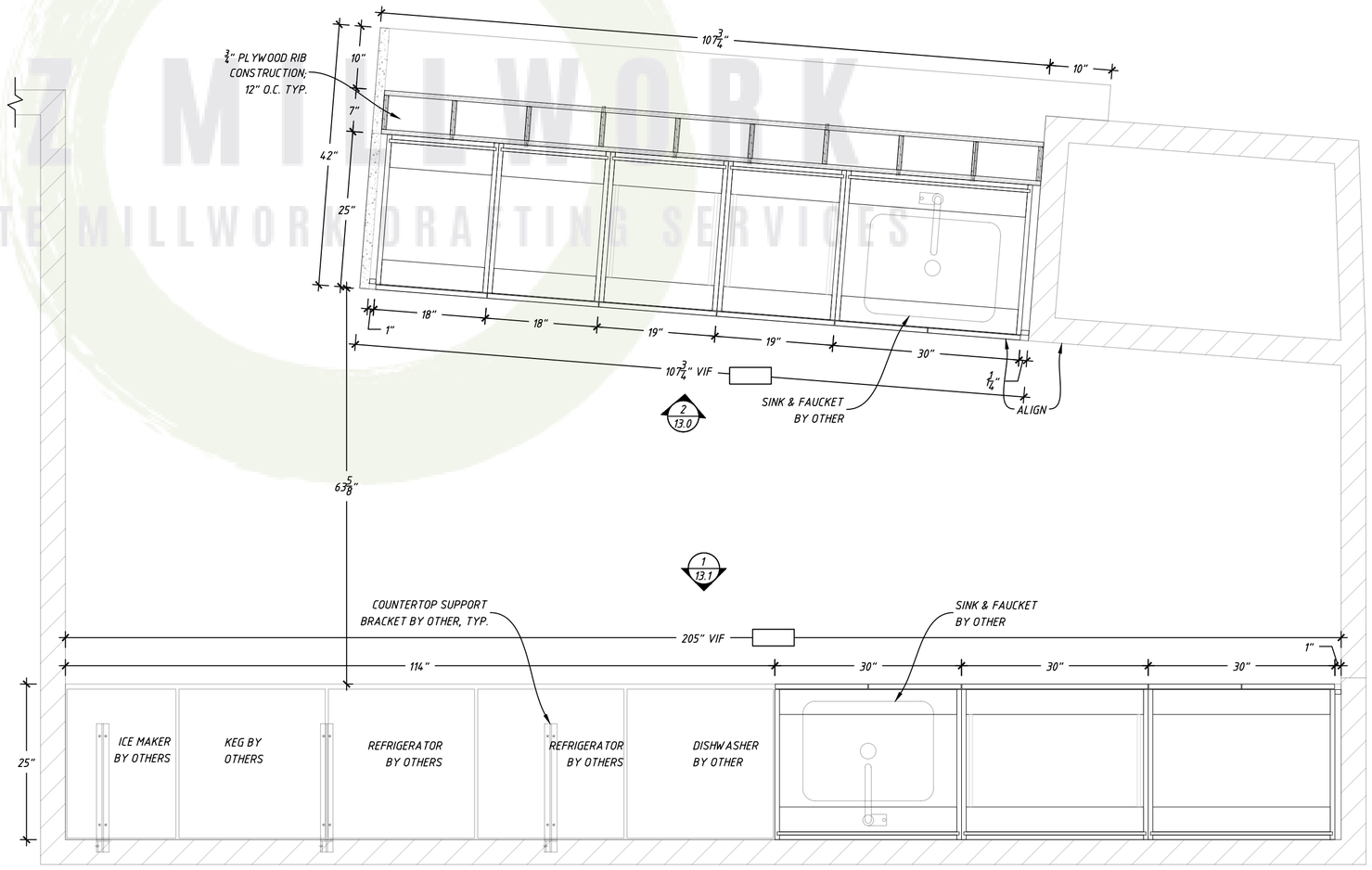

1 / 13.0 COFFEE BAR 241S - PLAN
SCALE: 3/4"=1'-0"

A2Z MILLWORK
COMPLETE MILLWORK DRAFTING SERVICES

MANUFACTURER: A2Z MILLWORK LLC

PROJECT:

REVISIONS

JOB #: 190412
DATE: 10/5/2020
DRAWN BY: A2Z

SHEET: COFFEE BAR 241S

SHEET: 13.0

COPYRIGHT © A2Z MILLWORK LLC 2019

MASTER MATERIAL SCHEDULE	
TAG	NOTES:
PL-4	WILSONART - LOFT DOOR - FINE VELVET - 48" X 120"
HW-2	DRAWER PULL - DOUG MOCKETT - DP269A - BLACK
HW-6	TRASH PULLOUT - REVASHELF - RV15PB2S
HW-11	Z CLIP - STAR HANGER - 400 NZ - $\frac{1}{4}$" NYLON PANEL CLIP

PL-4 CABINET CONSTRUCTION SHEDULE		
PART	TYPE	DESCRIPTION
CABINET DOOR	PARTICLE CORE	PLAM-4
CABINET BOX	PARTICLE CORE	3/4" BLACK MELAMINE
CABINET BACK	PARTICLE CORE	1/2" BLACK MELAMINE
DRAWER BOX	PARTICLE CORE	5/8" BLACK MELAMINE
DRAWER BOTTOM	PARTICLE CORE	1/2" BLACK MELAMINE
CABINET HINGE	BLUM 110° 71B3590	FULL OVERLAY
DRAWER SLIDE	BLUM TANDEM 563H	UNDERMOUNT
EXPOSED EDGEBANDING	.5MM	PLAM-4
SEMI EXPOSED EDGEBANDING	.5MM	BLACK PVC
ALL CABINET JOINTS GLUED AND DOWLED		

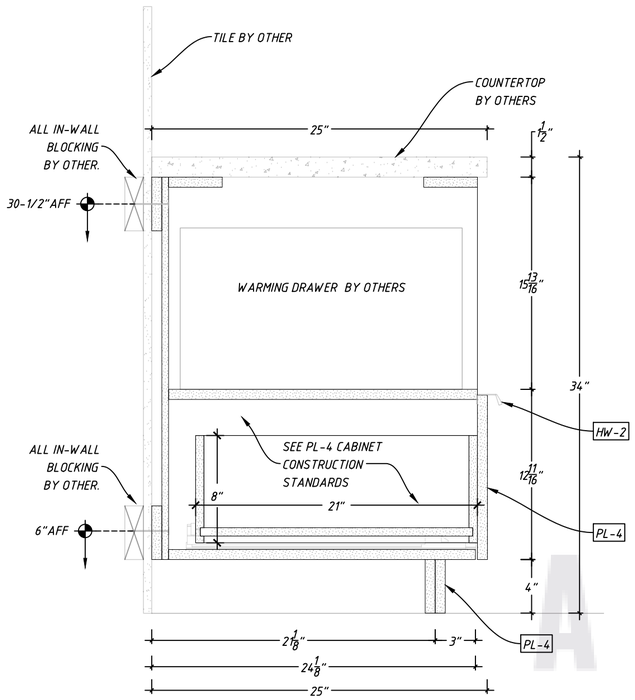

4 13.1 SECTION
SCALE: 1-1/2"=1'-0"

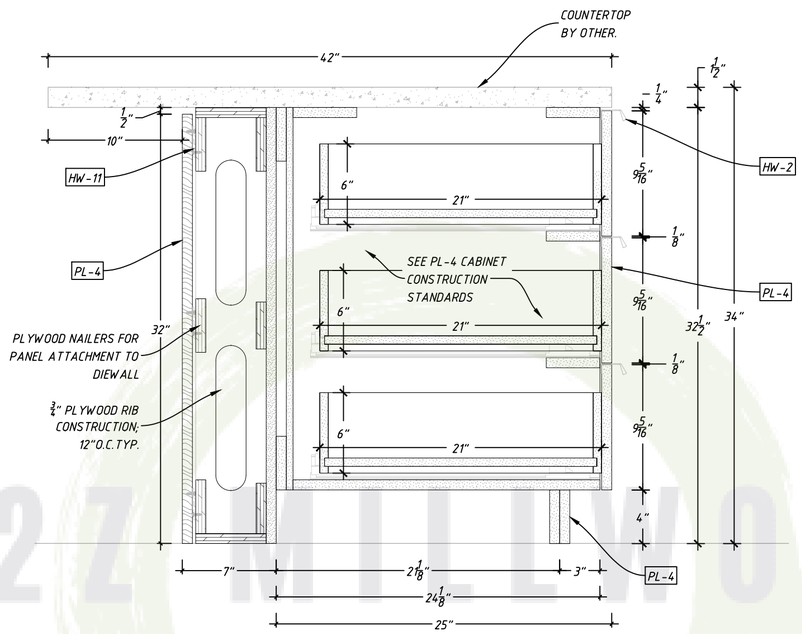

3 13.1 SECTION
SCALE: 1-1/2"=1'-0"

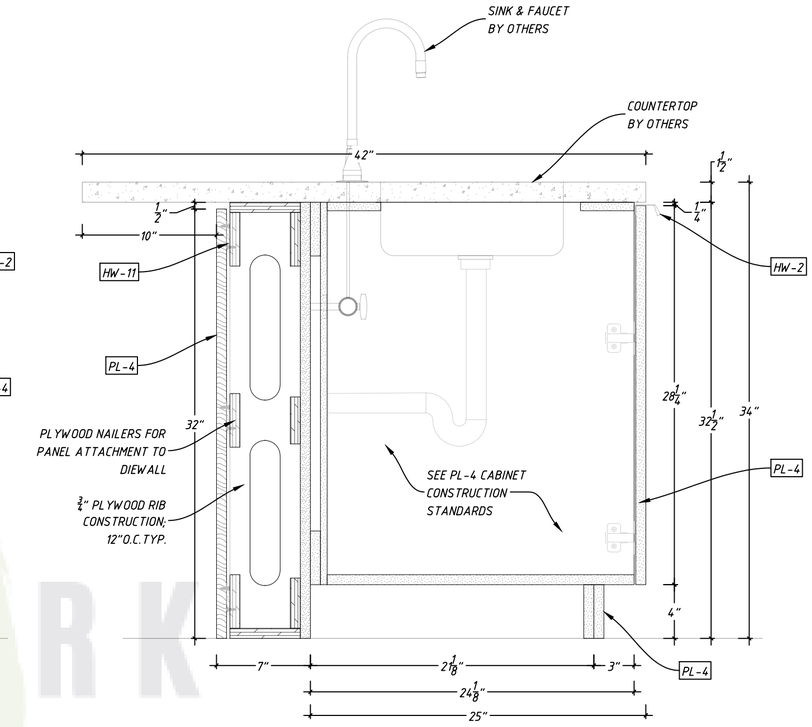

2 13.1 SECTION
SCALE: 1-1/2"=1'-0"

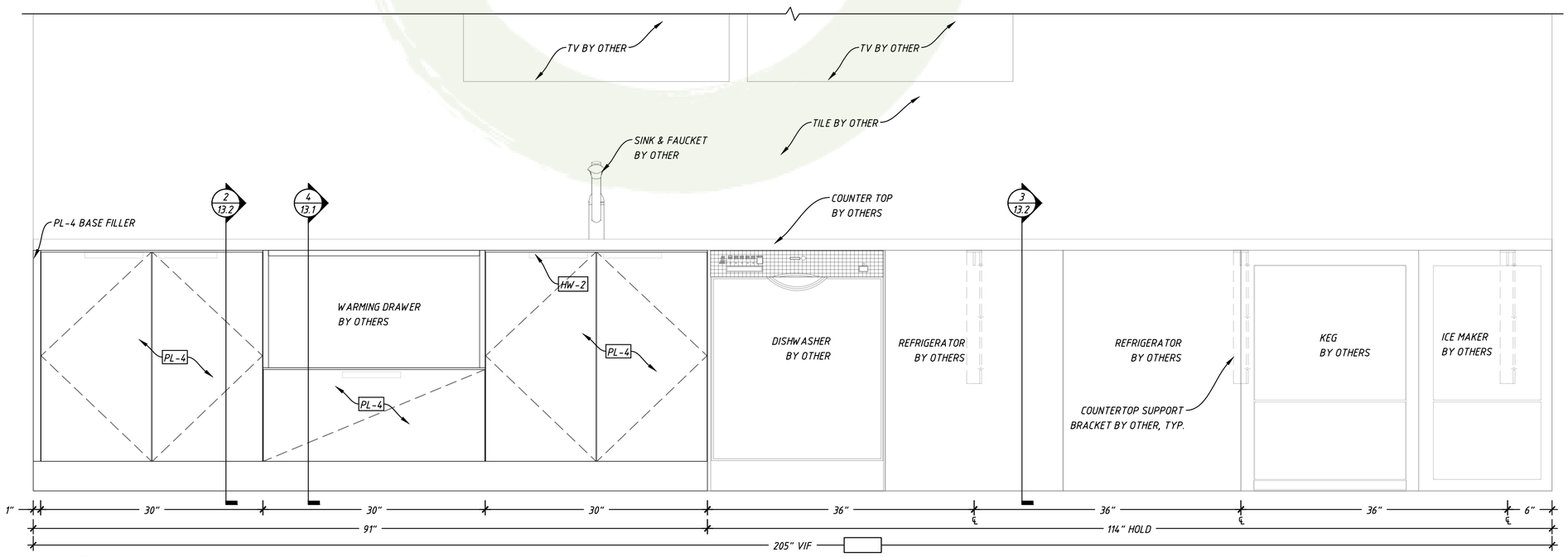

1 13.1 COFFEE BAR 241S - ELEVATION
SCALE: 1"=1'-0"

A2Z MILLWORK
COMPLETE MILLWORK DRAFTING SERVICES

MANUFACTURER: A2Z MILLWORK LLC

PROJECT:

REVISIONS

JOB #: 190412
DATE: 10/5/2020
DRAWN BY: A2Z

SHEET: COFFEE BAR 241S

SHEET: 13.1

COPYRIGHT © A2Z MILLWORK LLC 2019

MASTER MATERIAL SCHEDULE	
TAG	NOTES:
PL-4	WILSONART - LOFT DOOR - FINE VELVET - 48" X 120"
HW-2	DRAWER PULL - DOUG MOCKETT - DP269A - BLACK
HW-6	TRASH PULLOUT - REVASHELF - RV15PB2S
HW-11	Z CLIP - STAR HANGER - 400 NZ - $\frac{1}{4}$" NYLON PANEL CLIP

PL-4 CABINET CONSTRUCTION SHEDULE		
PART	TYPE	DESCRIPTION
CABINET DOOR	PARTICLE CORE	PLAM-4
CABINET BOX	PARTICLE CORE	3/4" BLACK MELAMINE
CABINET BACK	PARTICLE CORE	1/2" BLACK MELAMINE
DRAWER BOX	PARTICLE CORE	5/8" BLACK MELAMINE
DRAWER BOTTOM	PARTICLE CORE	1/2" BLACK MELAMINE
CABINET HINGE	BLUM 110° 71B3590	FULL OVERLAY
DRAWER SLIDE	BLUM TANDEM 563H	UNDERMOUNT
EXPOSED EDGEBANDING	.5MM	PLAM-4
SEMI EXPOSED EDGEBANDING	.5MM	BLACK PVC
ALL CABINET JOINTS GLUED AND DOWLED		

A2Z MILLWORK
COMPLETE MILLWORK DRAFTING SERVICES

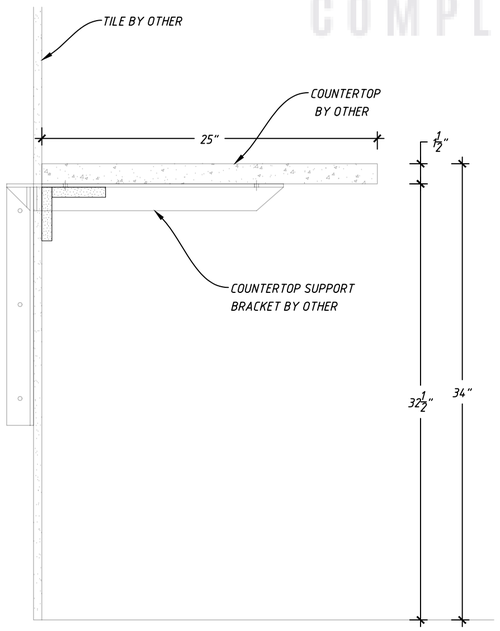

3 SECTION
13.2 SCALE: 1-1/2"=1'-0"

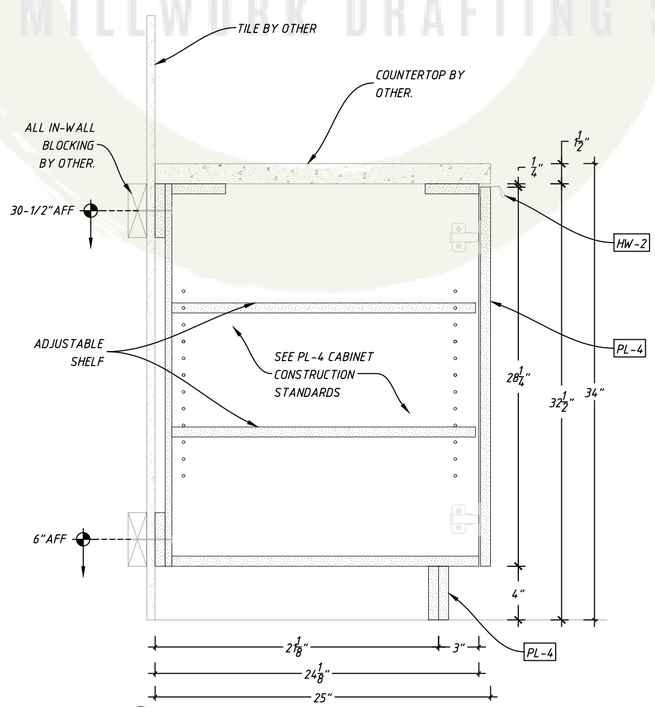

2 SECTION
13.2 SCALE: 1-1/2"=1'-0"

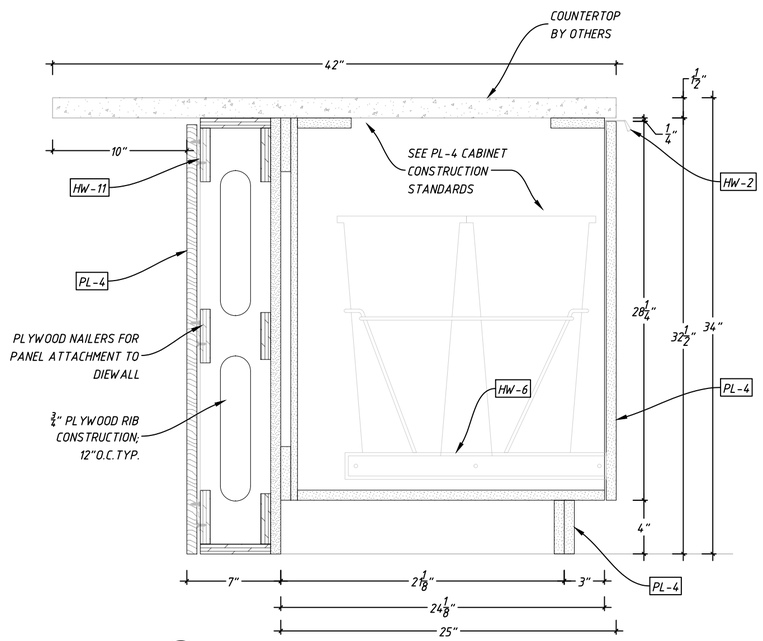

1 SECTION
13.2 SCALE: 1-1/2"=1'-0"

A2Z MILLWORK
COMPLETE MILLWORK DRAFTING SERVICES

MANUFACTURER:
A2Z MILLWORK LLC

PROJECT:

REVISIONS

JOB #: 190412
DATE: 10/5/2020
DRAWN BY: A2Z

SHEET:
COFFEE BAR
241S

SHEET:
13.2

COPYRIGHT © A2Z MILLWORK LLC 2019

MASTER MATERIAL SCHEDULE	
TAG	NOTES:
PL-2	LAMINART - SMOKED CHARCOAL BURLAP
HW-2	DRAWER PULL - DOUG MOCKETT - DP269A - BLACK
HW-6	TRASH PULLOUT - REVASHELF - RV15PB2S

PL-2 CABINET CONSTRUCTION SHEDULE		
PART	TYPE	DESCRIPTION
CABINET DOOR	PARTICLE CORE	PLAM-2
CABINET BOX	PARTICLE CORE	3/4" BLACK MELAMINE
CABINET BACK	PARTICLE CORE	1/2" BLACK MELAMINE
DRAWER BOX	PARTICLE CORE	5/8" BLACK MELAMINE
DRAWER BOTTOM	PARTICLE CORE	1/2" BLACK MELAMINE
CABINET HINGE	BLUM 110° 71B3590	FULL OVERLAY
DRAWER SLIDE	BLUM TANDEM 563H	UNDERMOUNT
EXPOSED EDGEBANDING	.5MM	PLAM-2
SEMI EXPOSED EDGEBANDING	.5MM	BLACK PVC
ALL CABINET JOINTS GLUED AND DOWLED		

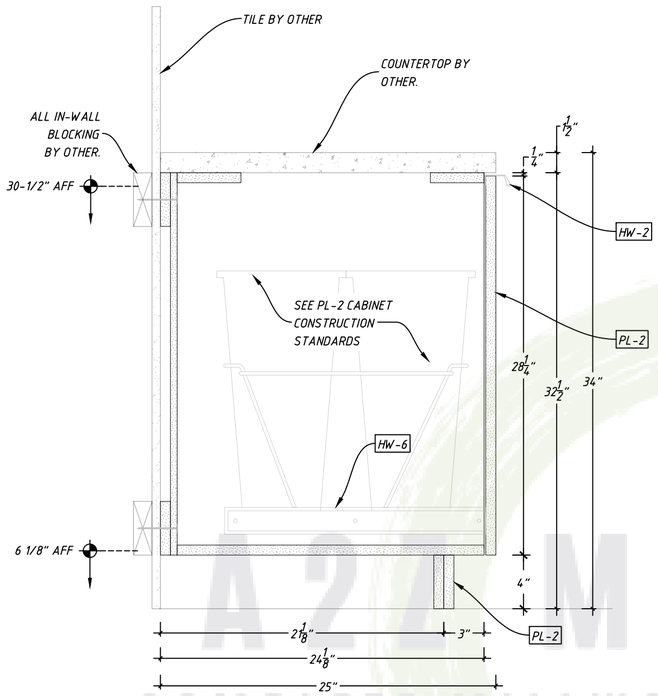

4 SECTION
14.0 SCALE: 1-1/2"=1'-0"

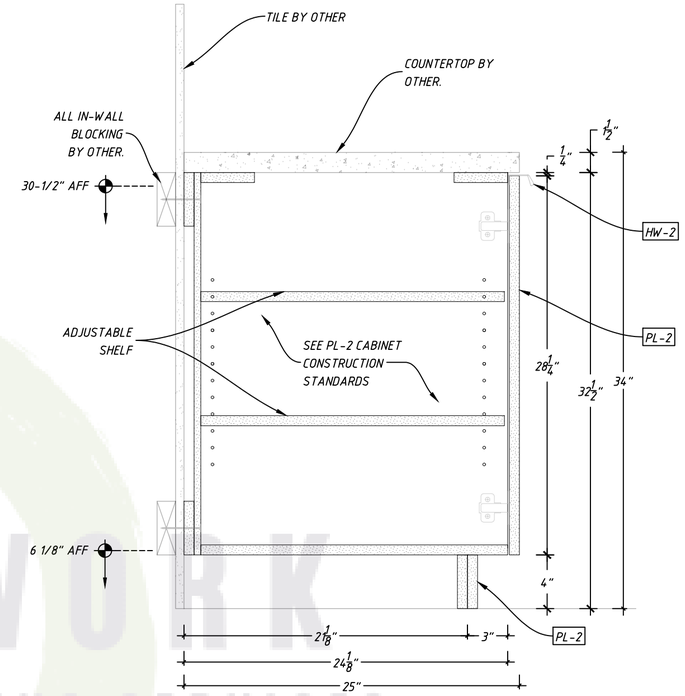

3 SECTION
14.0 SCALE: 1-1/2"=1'-0"

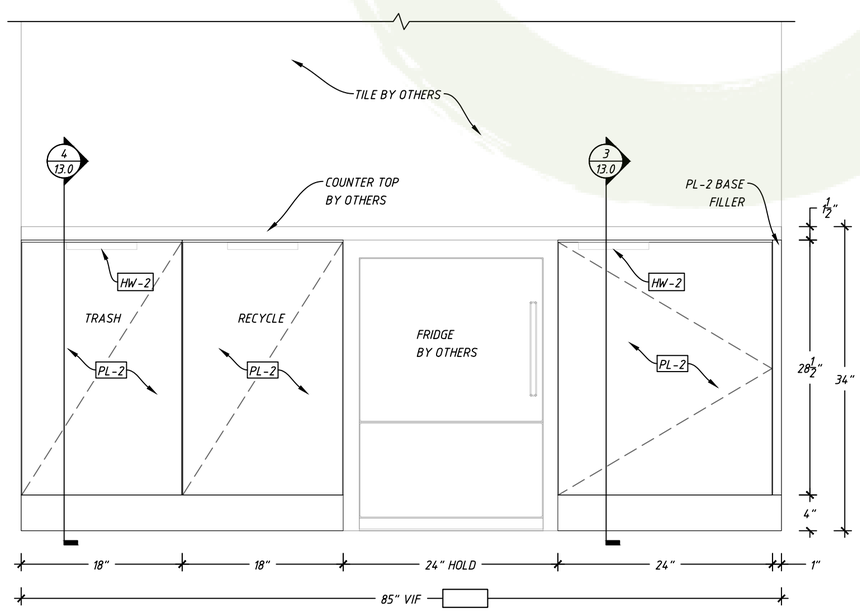

2 FITNESS 242S - ELEVATION
14.0 SCALE: 1"=1'-0"

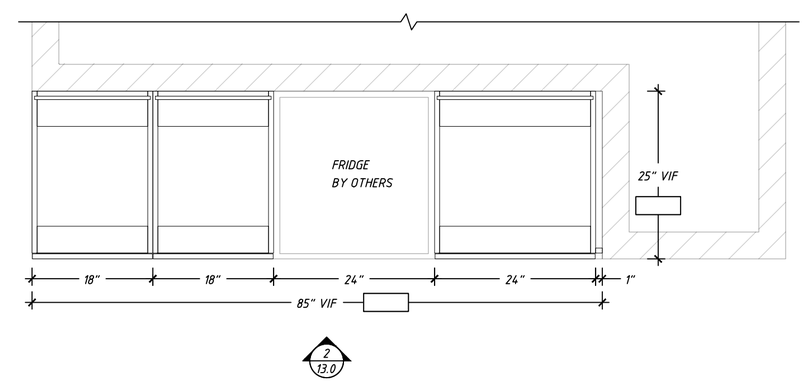

1 FITNESS 242S - PLAN
14.0 SCALE: 3/4"=1'-0"

A2Z MILLWORK
COMPLETE MILLWORK DRAFTING SERVICES

MANUFACTURER:
A2Z MILLWORK LLC

PROJECT:

REVISIONS

JOB #: 190412
DATE: 10/5/2020
DRAWN BY: A2Z

SHEET:
FITNESS 242S

SHEET:
14.0

COPYRIGHT © A2Z MILLWORK LLC 2019

MASTER MATERIAL SCHEDULE	
TAG	NOTES:
WD-1	$\frac{3}{4}$" SANDED/SATIN FINISHED OSB APPLIED PANEL
HW-11	Z CLIP - STAR HANGER - 400 NZ - $\frac{1}{4}$" NYLON PANEL CLIP

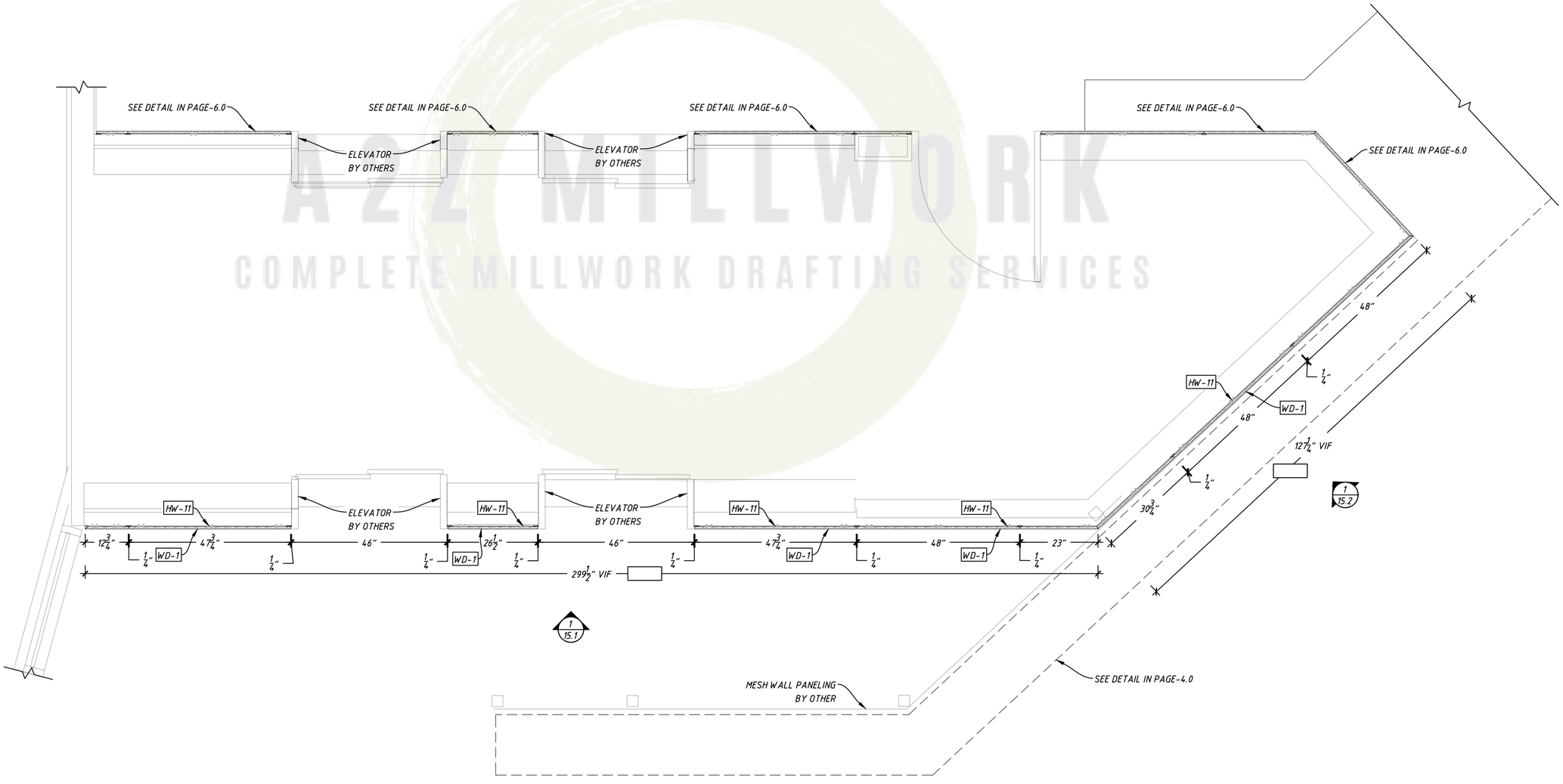

1/15.0 ELEVATOR LOBBY 246S - PLAN
SCALE: 1/2" = 1'-0"

A2Z MILLWORK
COMPLETE MILLWORK DRAFTING SERVICES

MANUFACTURER: A2Z MILLWORK LLC

PROJECT:

REVISIONS

JOB #: 190412
DATE: 10/5/2020
DRAWN BY: A2Z

SHEET: ELEVATOR LOBBY 246S

SHEET: 15.0

COPYRIGHT © A2Z MILLWORK LLC 2019

MASTER MATERIAL SCHEDULE	
TAG	NOTES:
WD-1	$\frac{3}{4}$" SANDED/SATIN FINISHED OSB APPLIED PANEL
HW-11	Z CLIP - STAR HANGER - 400 NZ - $\frac{1}{4}$" NYLON PANEL CLIP

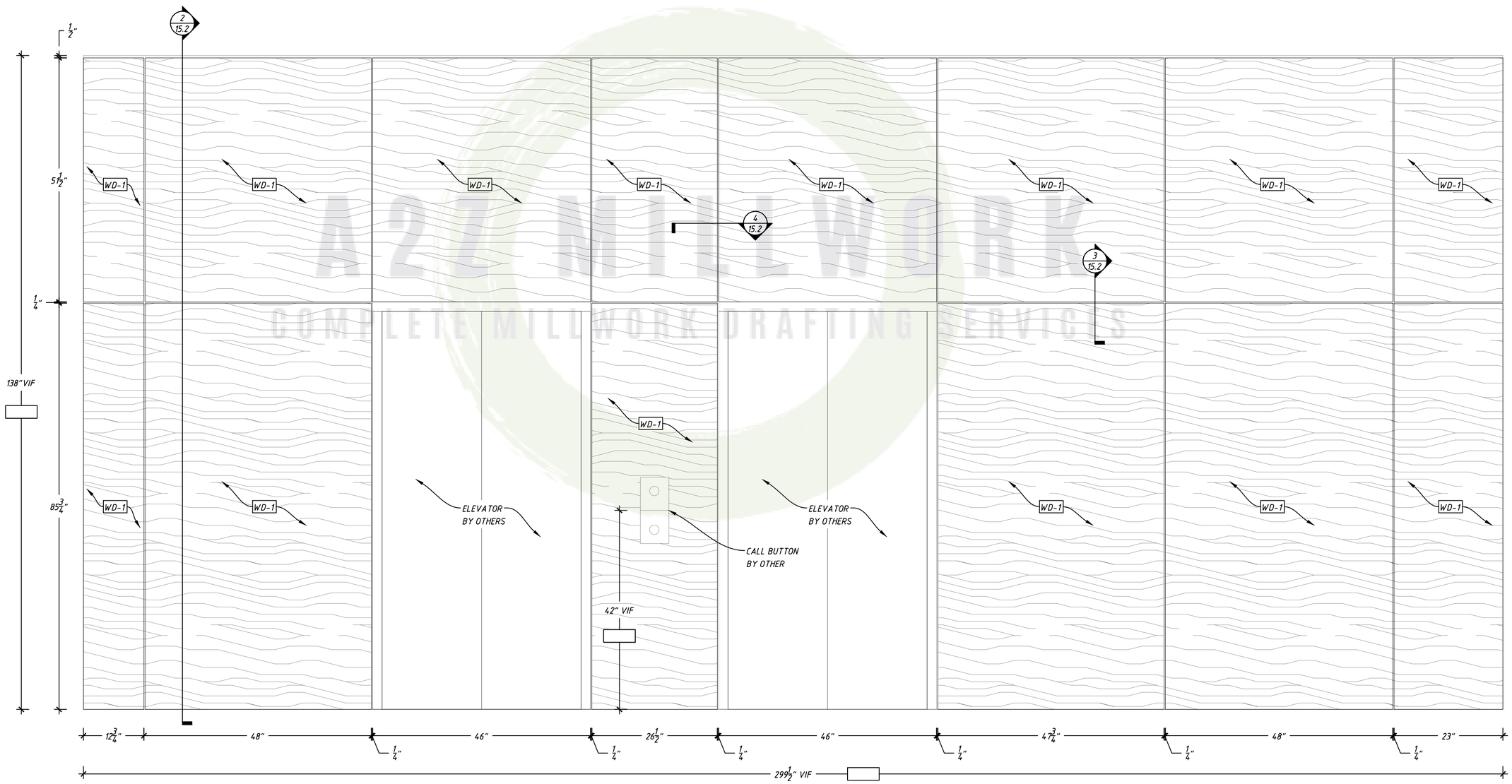

1 ELEVATOR LOBBY 246S - ELEVATION
15.1 SCALE: 3/4" = 1'-0"

A2Z MILLWORK
COMPLETE MILLWORK DRAFTING SERVICES

MANUFACTURER: A2Z MILLWORK LLC

PROJECT:

REVISIONS

JOB #: 190412

DATE: 10/5/2020

DRAWN BY: A2Z

SHEET: ELEVATOR LOBBY 246S

SHEET: 15.1

COPYRIGHT © A2Z MILLWORK LLC 2019

MASTER MATERIAL SCHEDULE	
TAG	NOTES:
WD-1	$\frac{3}{4}$" SANDED/SATIN FINISHED OSB APPLIED PANEL
HW-11	Z CLIP - STAR HANGER - 400 NZ - $\frac{1}{4}$" NYLON PANEL CLIP

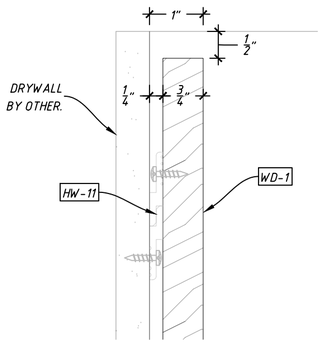

5 DETAIL
15.2 SCALE: 6"=1'-0"

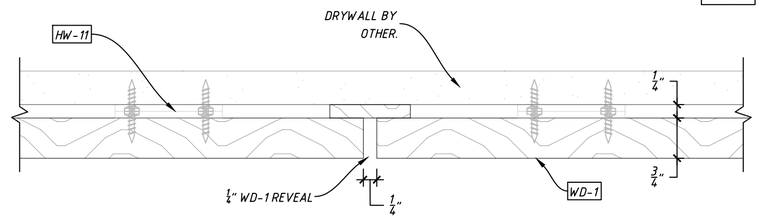

4 SECTION
15.2 SCALE: 6"=1'-0"

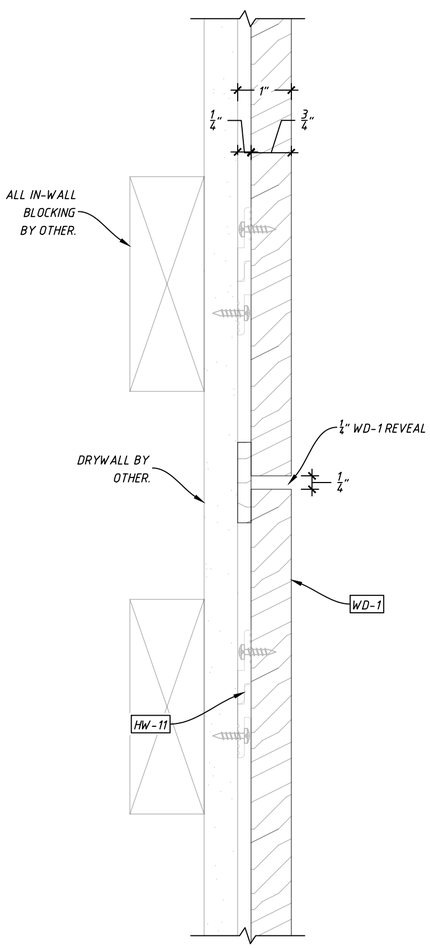

3 SECTION
15.2 SCALE: 6"=1'-0"

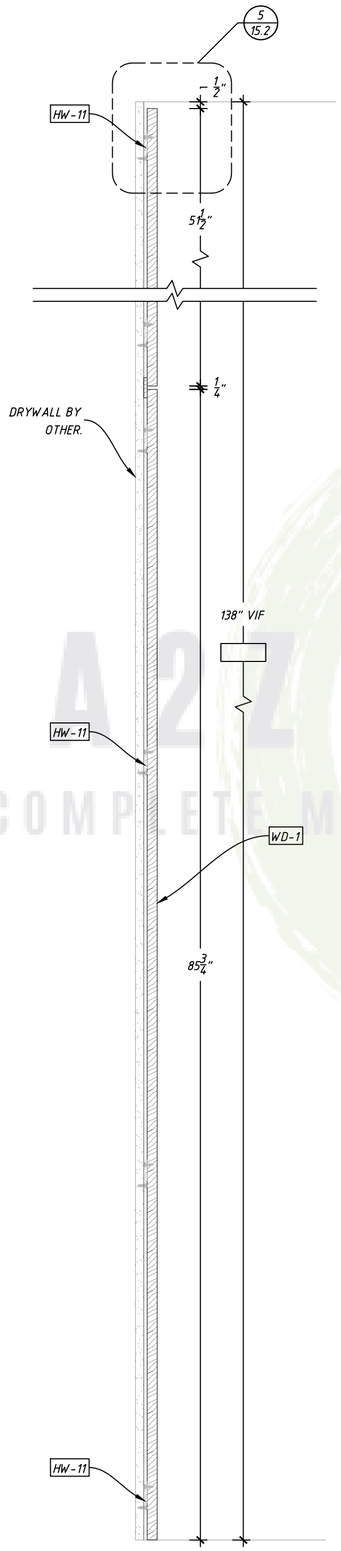

2 SECTION
15.2 SCALE: 1-1/2"=1'-0"

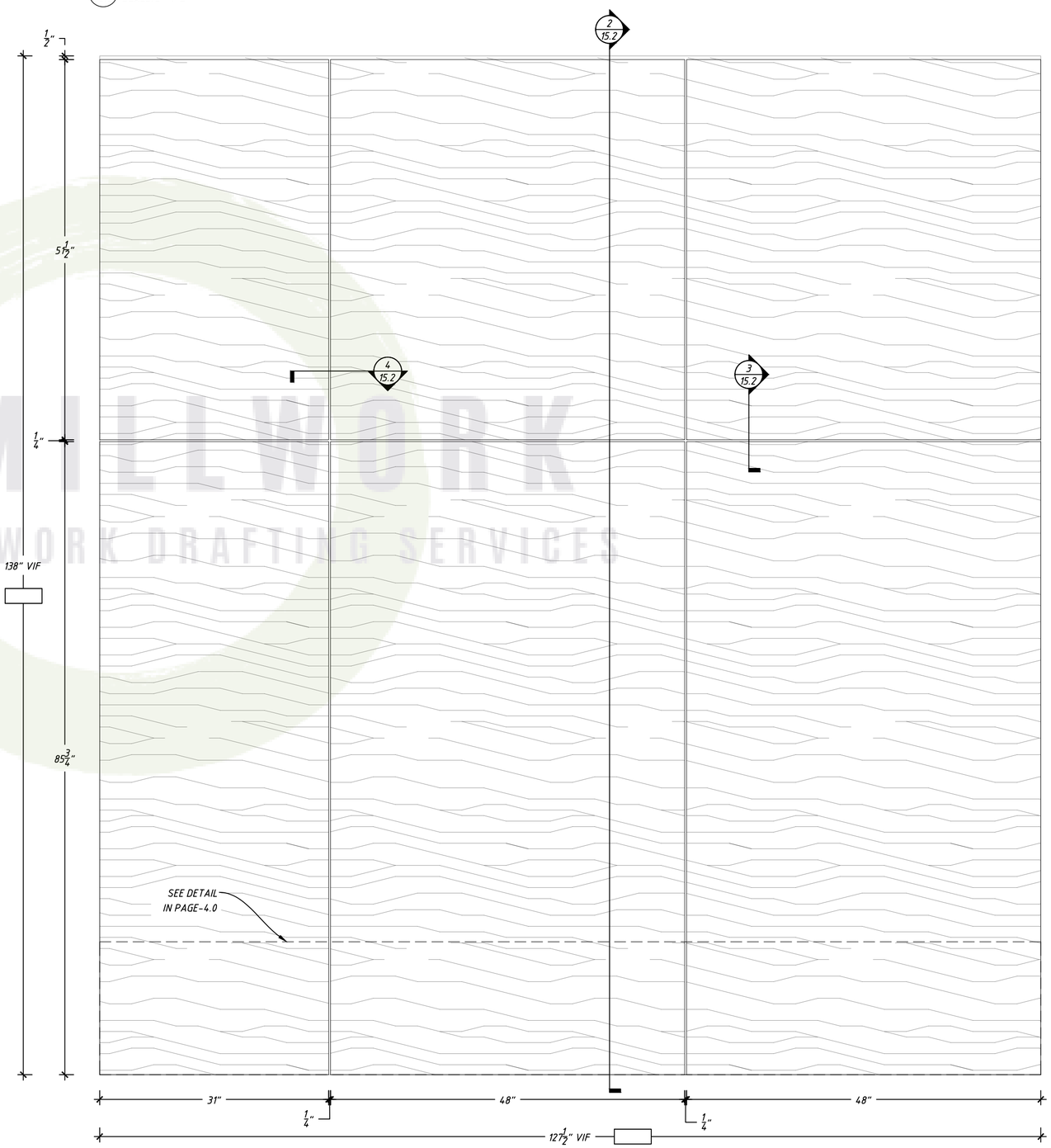

1 ELEVATOR LOBBY 246S - ELEVATION
15.2 SCALE: 1" = 1'-0"

A2Z MILLWORK
COMPLETE MILLWORK DRAFTING SERVICES

MANUFACTURER: A2Z MILLWORK LLC

PROJECT:

REVISIONS

JOB #: 190412

DATE: 10/5/2020

DRAWN BY: A2Z

SHEET: ELEVATOR LOBBY 246S

SHEET: 15.2

COPYRIGHT © A2Z MILLWORK LLC 2019

MASTER MATERIAL SCHEDULE	
TAG	NOTES:
WD-1	$\frac{3}{4}$" SANDED/SATIN FINISHED OSB APPLIED PANEL
WD-2	$\frac{3}{4}$" STAINED OAK VENEER PANEL - DARK GREY
TR-1	$\frac{3}{4}$"X3" SOLID NOSING - PAINTED BLACK
HW-5	HD FLOATING SHELF BRACKET - AKSEL - 58"L
HW-11	Z CLIP - STAR HANGER - 400 NZ - $\frac{1}{4}$" NYLON PANEL CLIP

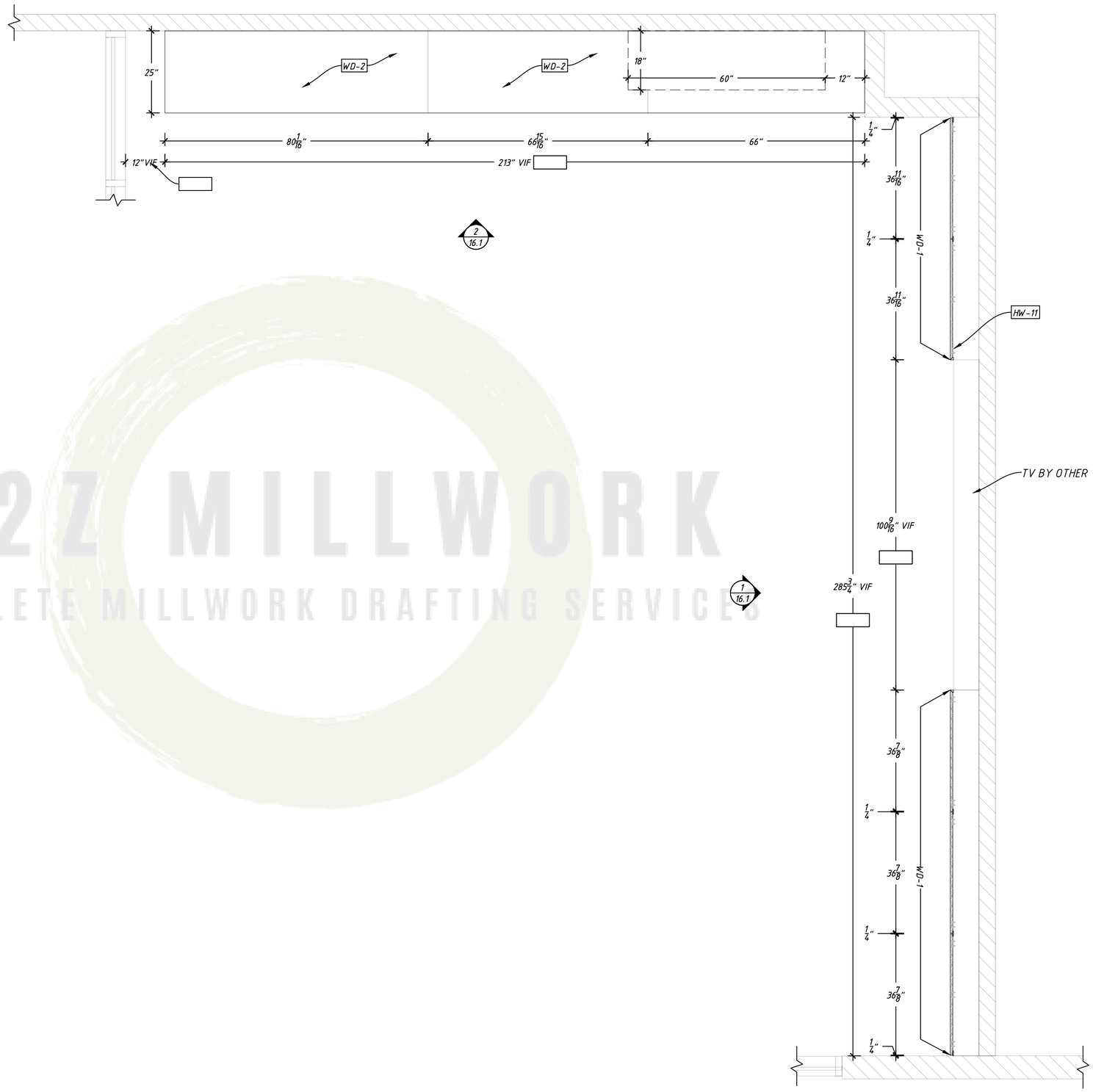

1 / 16.0 GAME ROOM 328S - PLAN
SCALE: 1/2" = 1'-0"

A2Z MILLWORK
COMPLETE MILLWORK DRAFTING SERVICES

MANUFACTURER: A2Z MILLWORK LLC

PROJECT:

REVISIONS

JOB #: 190412
DATE: 10/5/2020
DRAWN BY: A2Z

SHEET: GAME ROOM 328S

SHEET: 16.0

COPYRIGHT © A2Z MILLWORK LLC 2019

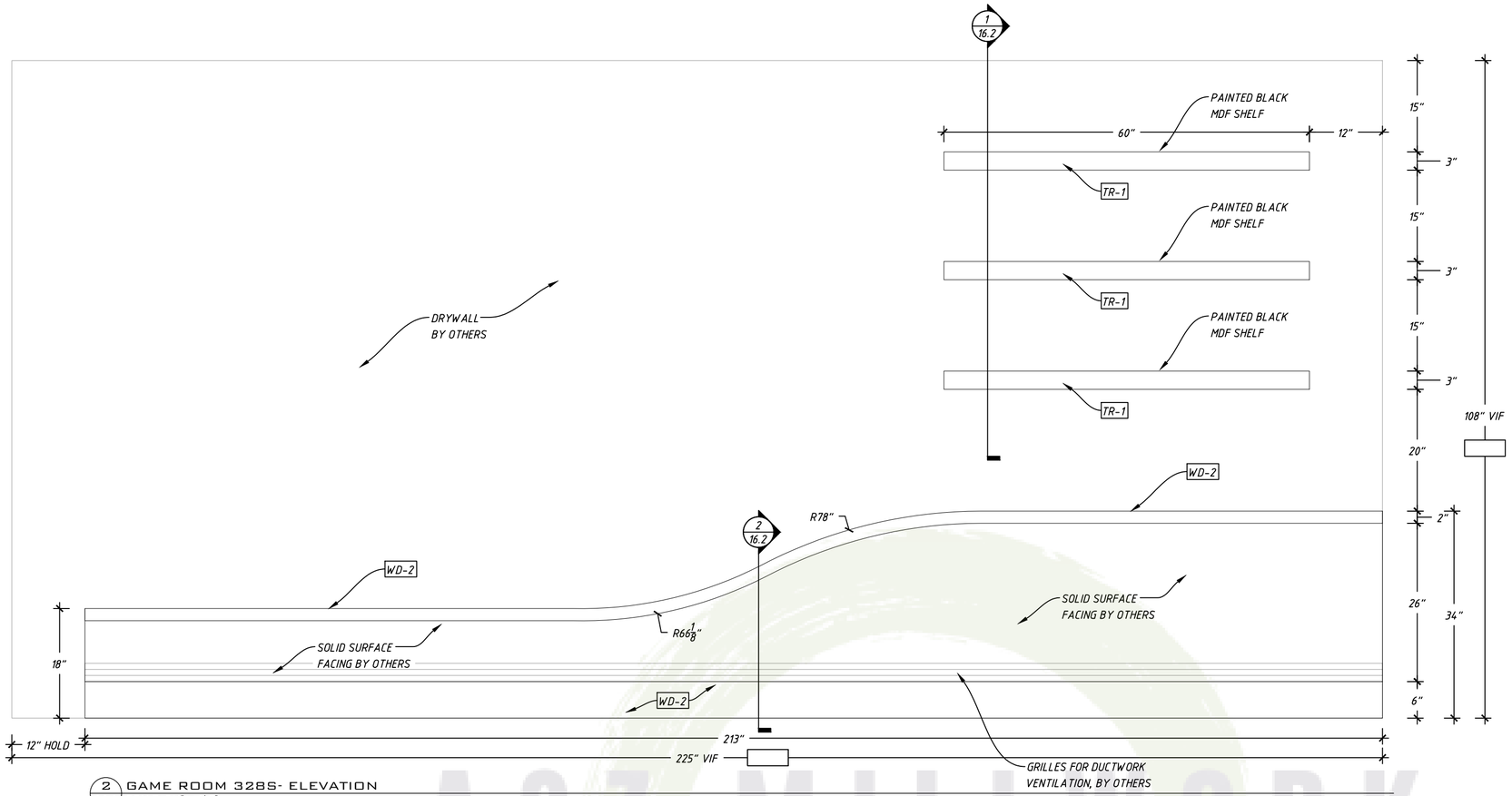

2 GAME ROOM 328S- ELEVATION
16.1 SCALE: 3/4" = 1'-0"

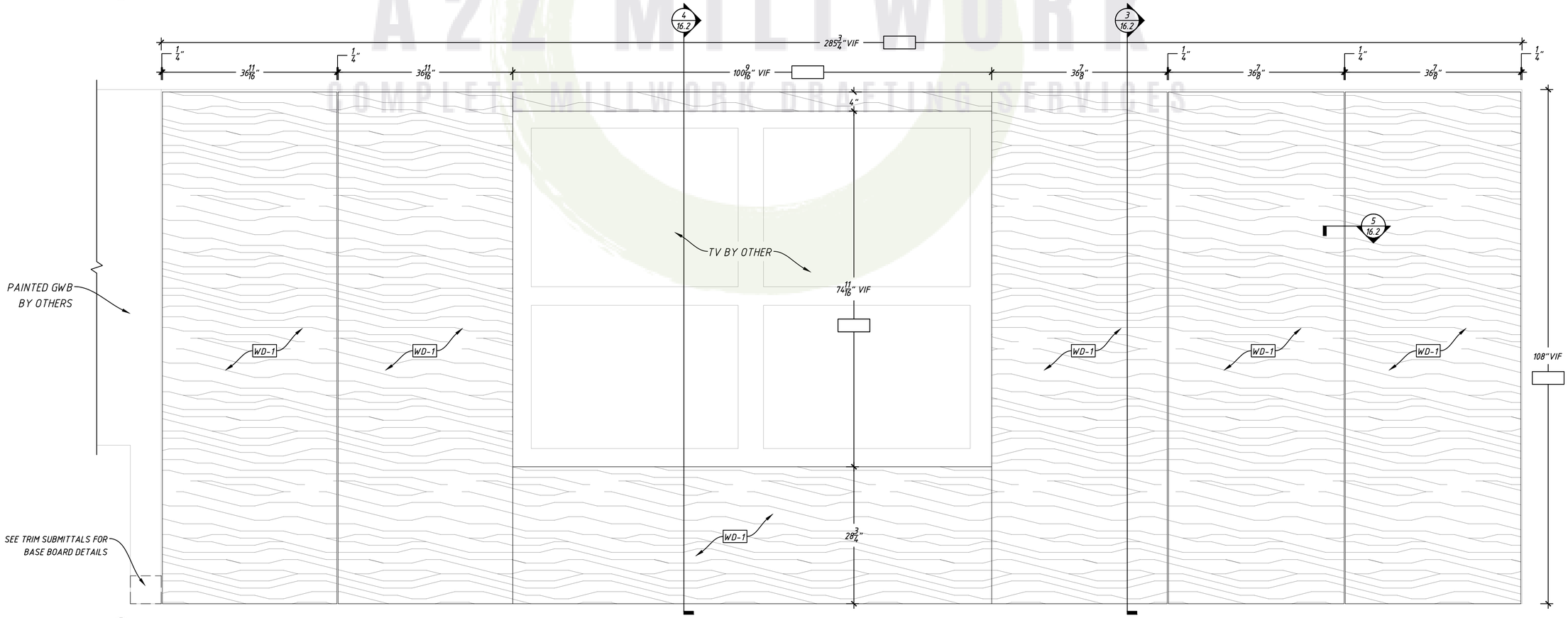

1 GAME ROOM 328S - ELEVATION
16.1 SCALE: 3/4" = 1'-0"

MASTER MATERIAL SCHEDULE

TAG	NOTES:
WD-1	3/4" SANDED/SATIN FINISHED OSB APPLIED PANEL
WD-2	3/4" STAINED OAK VENEER PANEL - DARK GREY
TR-1	3/4"X3" SOLID NOSING - PAINTED BLACK
HW-5	HD FLOATING SHELF BRACKET - AKSEL - 58"L
HW-11	Z CLIP - STAR HANGER - 400 NZ - 1/4" NYLON PANEL CLIP

A2Z MILLWORK
COMPLETE MILLWORK DRAFTING SERVICES

MANUFACTURER:
A2Z MILLWORK LLC

PROJECT:

REVISIONS

JOB #: 190412
DATE: 10/5/2020
DRAWN BY: A2Z

SHEET:
GAME ROOM
328S

SHEET:
16.1

COPYRIGHT © A2Z MILLWORK LLC 2019

MASTER MATERIAL SCHEDULE	
TAG	NOTES:
WD-1	$\frac{3}{4}$" SANDED/SATIN FINISHED OSB APPLIED PANEL
WD-2	$\frac{3}{4}$" STAINED OAK VENEER PANEL - DARK GREY
TR-1	$\frac{3}{4}$"X3" SOLID NOSING - PAINTED BLACK
HW-5	HD FLOATING SHELF BRACKET - AKSEL - 58"L
HW-11	Z CLIP - STAR HANGER - 400 NZ - $\frac{1}{4}$" NYLON PANEL CLIP

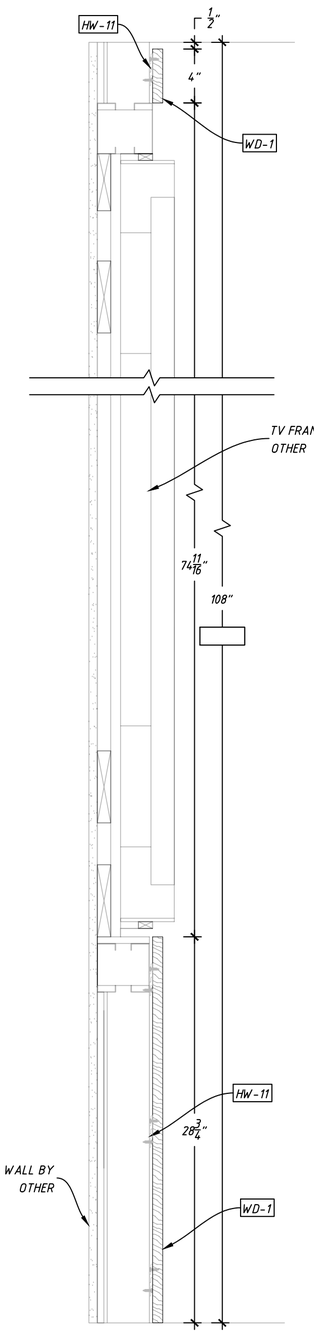

4 SECTION 16.2 SCALE: 1-1/2"=1'-0"

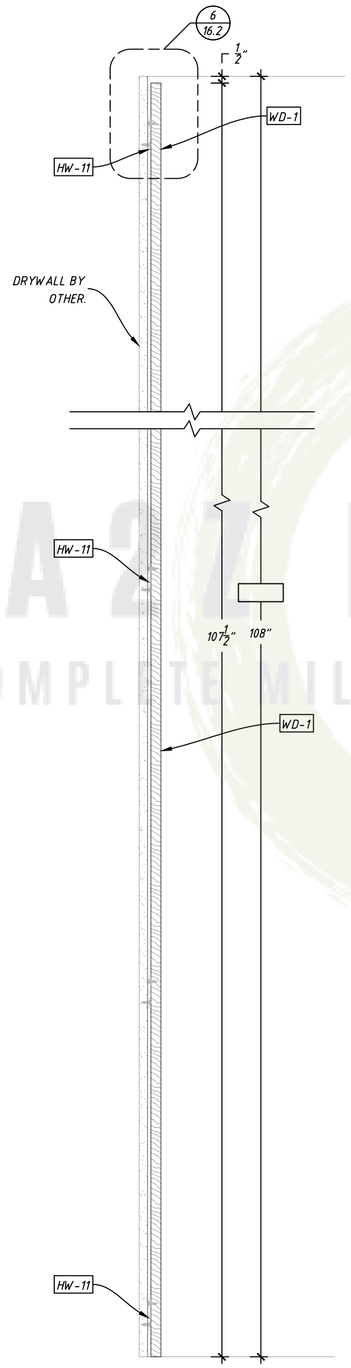

3 SECTION 16.2 SCALE: 1-1/2"=1'-0"

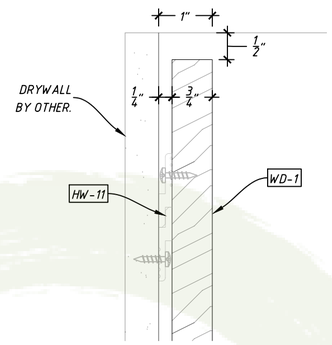

6 DETAIL 16.2 SCALE: 6"=1'-0"

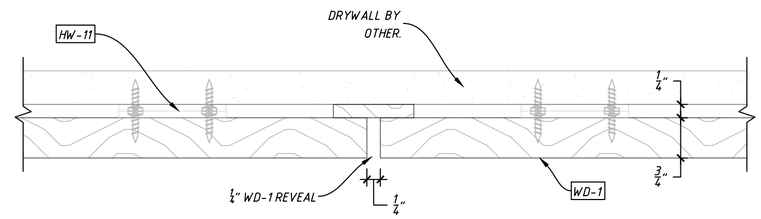

5 SECTION 16.2 SCALE: 6"=1'-0"

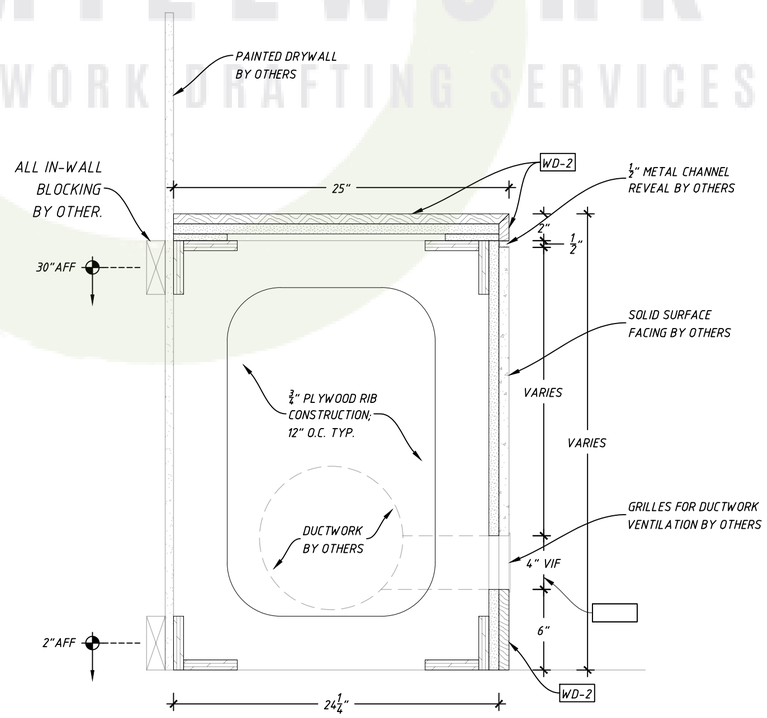

2 SECTION 16.2 SCALE: 1-1/2"=1'-0"

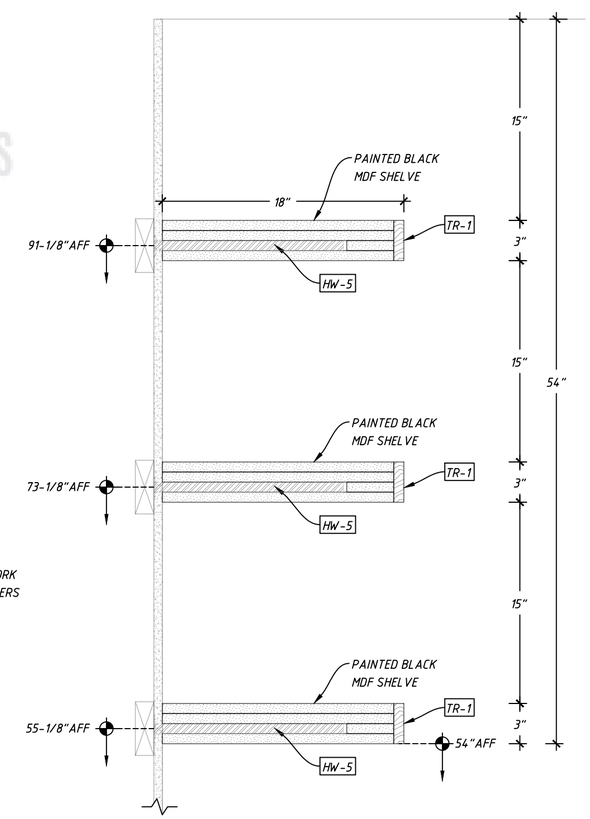

1 SECTION 16.2 SCALE: 1-1/2"=1'-0"

A2Z MILLWORK
COMPLETE MILLWORK DRAFTING SERVICES

MANUFACTURER: A2Z MILLWORK LLC

PROJECT:

REVISIONS

JOB #: 190412

DATE: 10/5/2020

DRAWN BY: A2Z

SHEET: GAME ROOM 328S

SHEET: 16.2

COPYRIGHT © A2Z MILLWORK LLC 2019

MASTER MATERIAL SCHEDULE	
TAG	NOTES:
WD-1	$\frac{3}{4}$" SANDED/SATIN FINISHED OSB APPLIED PANEL
HW-11	Z CLIP - STAR HANGER - 400 NZ - $\frac{1}{4}$" NYLON PANEL CLIP

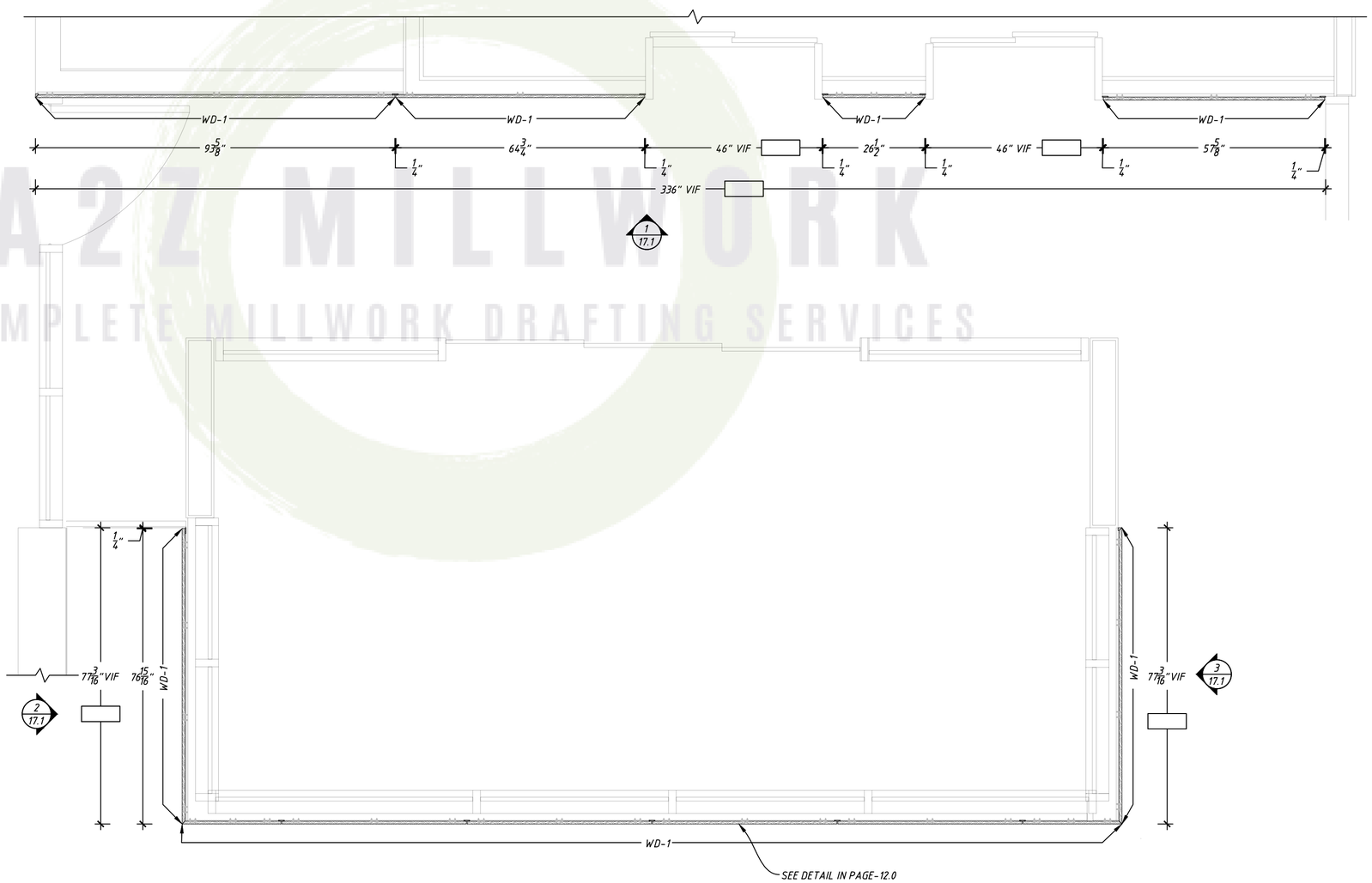

1 / 17.0 LEVEL 2 OPEN LOBBY (CORRIDOR 330S) - PLAN
SCALE: 1/2" = 1'-0"

A2Z MILLWORK
COMPLETE MILLWORK DRAFTING SERVICES

MANUFACTURER: A2Z MILLWORK LLC

PROJECT:

REVISIONS

JOB #: 190412
DATE: 10/5/2020
DRAWN BY: A2Z

SHEET: LEVEL 2 OPEN LOBBY (CORRIDOR 330S)

SHEET: 17.0

COPYRIGHT © A2Z MILLWORK LLC 2019

MASTER MATERIAL SCHEDULE	
TAG	NOTES:
WD-1	$\frac{3}{4}$" SANDED/SATIN FINISHED OSB APPLIED PANEL
HW-11	Z CLIP - STAR HANGER - 400 NZ - $\frac{1}{4}$" NYLON PANEL CLIP

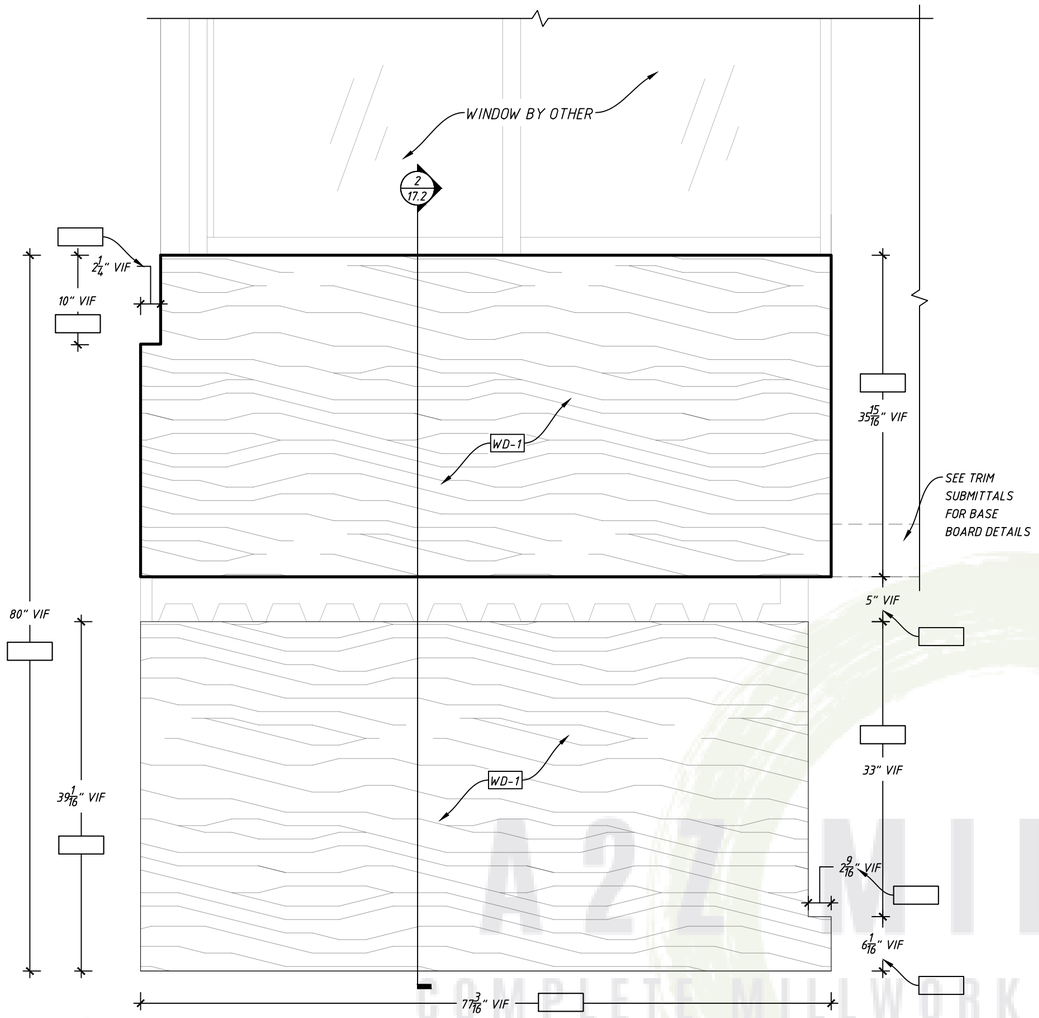

3 / 17.1 LEVEL 2 OPEN LOBBY (CORRIDOR 330S - ELEVATION
SCALE: 1/2" = 1'-0"

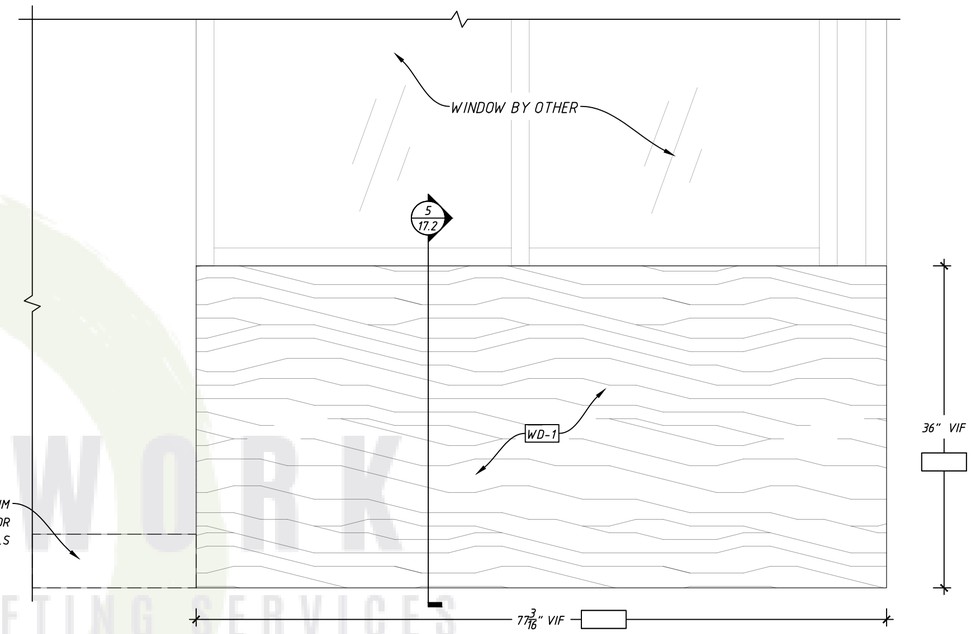

2 / 17.1 LEVEL 2 OPEN LOBBY (CORRIDOR 330S - ELEVATION
SCALE: 1/2" = 1'-0"

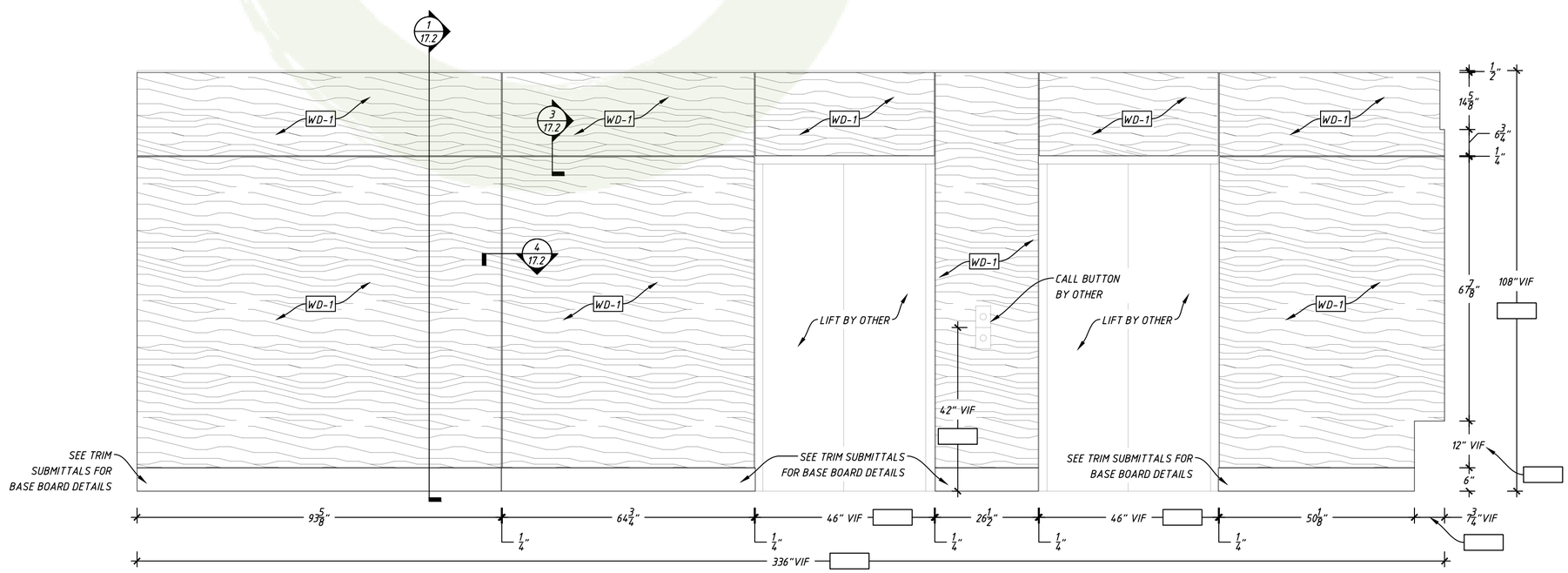

1 / 17.1 LEVEL 2 OPEN LOBBY (CORRIDOR 330S - ELEVATION
SCALE: 1/2" = 1'-0"

A2Z MILLWORK
COMPLETE MILLWORK DRAFTING SERVICES

MANUFACTURER: A2Z MILLWORK LLC

PROJECT:

REVISIONS

JOB #: 190412

DATE: 10/5/2020

DRAWN BY: A2Z

SHEET: LEVEL 2 OPEN LOBBY (CORRIDOR 330S)

SHEET: 17.1

COPYRIGHT © A2Z MILLWORK LLC 2019

MASTER MATERIAL SCHEDULE	
TAG	NOTES:
WD-1	$\frac{3}{4}$" SANDED/SATIN FINISHED OSB APPLIED PANEL
HW-11	Z CLIP - STAR HANGER - 400 NZ - $\frac{1}{4}$" NYLON PANEL CLIP

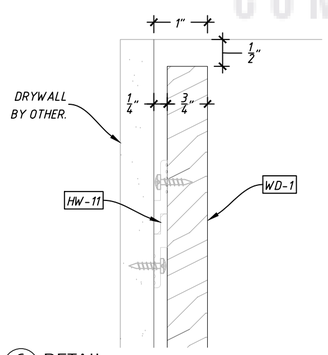

6 DETAIL
17.2 SCALE: 6"=1'-0"

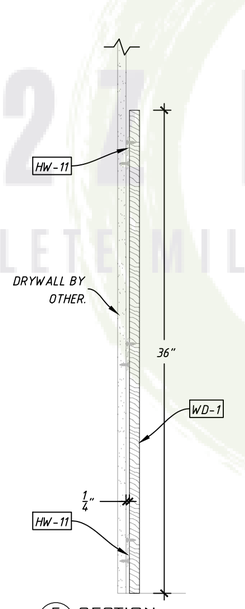

5 SECTION
17.2 SCALE: 1-1/2"=1'-0"

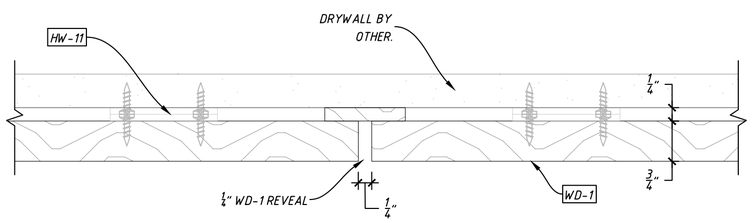

4 SECTION
17.2 SCALE: 6"=1'-0"

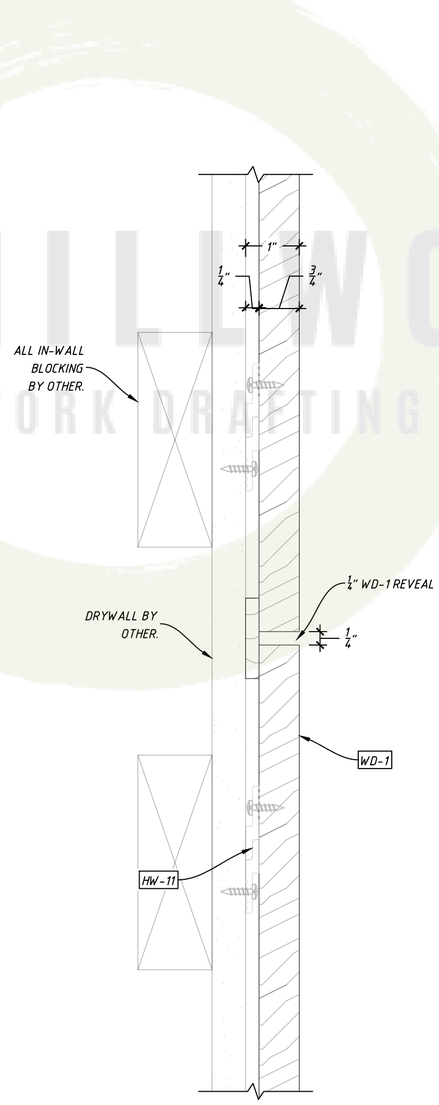

3 SECTION
17.2 SCALE: 6"=1'-0"

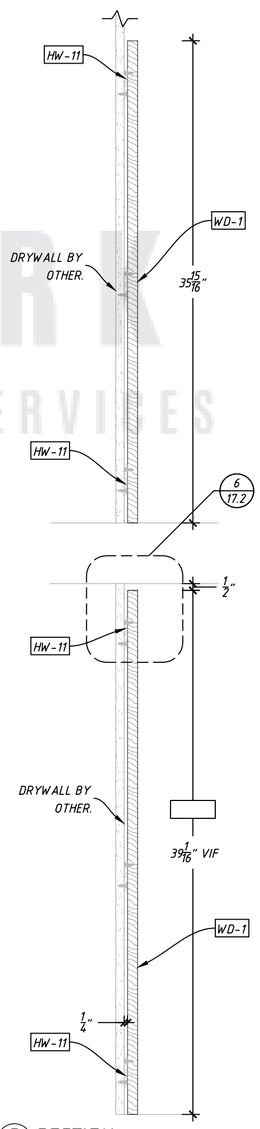

2 SECTION
17.2 SCALE: 1-1/2"=1'-0"

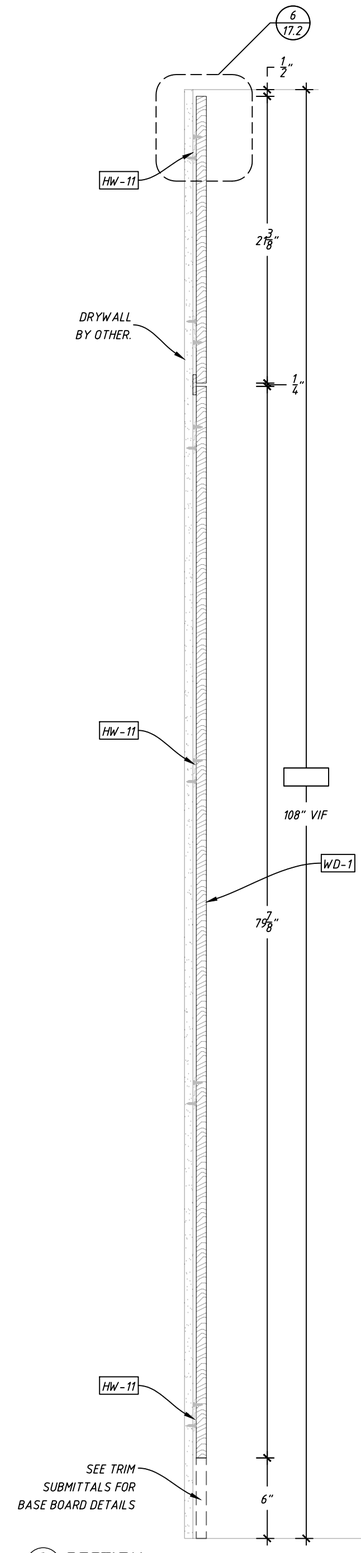

1 SECTION
17.2 SCALE: 1-1/2"=1'-0"

A2Z MILLWORK
COMPLETE MILLWORK DRAFTING SERVICES

MANUFACTURER:
A2Z MILLWORK LLC

PROJECT:

REVISIONS

JOB #: 190412
DATE: 10/5/2020
DRAWN BY: A2Z

SHEET:
LEVEL 2 OPEN LOBBY (CORRIDOR 330S)

SHEET:
17.2

COPYRIGHT © A2Z MILLWORK LLC 2019